Replacement Procedure
Actuators

CJP2	Pin Cylinder	p. 375
CM2	Air Cylinder	p. 377
CVM	Valve Mounted Cylinder	p. 377
CG1	Air Cylinder	p. 378
CG3	Air Cylinder/Short Type	p. 378
CG5-S	Stainless Steel Cylinder	p. 378
MB	Air Cylinder	p. 381
MB1	Square Tube Type Air Cylinder	p. 381
CA2	Air Cylinder	p. 381
CS1	Air Cylinder	p. 384
CS2	Air Cylinder	p. 384
CUJ	Mini Free Mount Cylinder	p. 386
CQS	Compact Cylinder	p. 387
CQ2	Compact Cylinder	p. 387
RQ	Compact Cylinder with Air Cushion	p. 387
CXT	Platform Cylinder	p. 387
CVQ	Compact Cylinder/With Solenoid Valve	p. 387
HYQ	Hygienic Design Cylinder	p. 394
HYC	Hygienic Design Cylinder	p. 394
HYG	Hygienic Design Cylinder	p. 398
MY1B-□Z	Mechanically Jointed Rodless Cylinder/Basic Type	p. 401
MY1B	Mechanically Jointed Rodless Cylinder/Basic Type	p. 403
MY1M	Mechanically Jointed Rodless Cylinder/Slide Bearing Guide Type	p. 405
MY1C	Mechanically Jointed Rodless Cylinder/Cam Follower Guide Type	p. 405
MY1□W	Mechanically Jointed Rodless Cylinder/With Protective Cover	p. 405
MY1H-□Z	Mechanically Jointed Rodless Cylinder/Linear Guide Type	p. 409
MY1H	Mechanically Jointed Rodless Cylinder/Linear Guide Type	p. 411
MY2C	Mechanically Jointed Rodless Cylinder/Cam Follower Guide Type	p. 412
MY2H/HT	Mechanically Jointed Rodless Cylinder/Linear Guide Type	p. 412
MY3A	Mechanically Jointed Rodless Cylinder/Basic Type	p. 413
MY3B	Mechanically Jointed Rodless Cylinder/Basic Type	p. 413
MY3M	Mechanically Jointed Rodless Cylinder/Slide Bearing Guide Type	p. 413
CY3B-Z	Magnetically Coupled Rodless Cylinder/Basic	p. 415-1
CY3B	Magnetically Coupled Rodless Cylinder/Basic Type	p. 416
CY3R	Magnetically Coupled Rodless Cylinder/Direct Mount Type	p. 417
REAR	Sine Rodless Cylinder	p. 417
REBR	Sine Rodless Cylinder	p. 417
CY1S	Magnetically Coupled Rodless Cylinder/Slider Type: Slide Bearing	p. 418
CY1L	Magnetically Coupled Rodless Cylinder/Slider Type: Ball Bushing Bearing	p. 419
MXS	Air Slide Table	p. 420
MXQ	Air Slide Table	p. 420
MXQR	Air Slide Table/Reversible Type	p. 420
MXF	Low Profile Slide Table	p. 425
MXW	Air Slide Table	p. 427
MXP	Air Slide Table	p. 430
MXY	Air Slide Table/Long Stroke Type	p. 433
MGP	Compact Guide Cylinder	p. 437
MGPW	Compact Guide Cylinder/Wide Type	p. 437
MGQ	Compact Guide Cylinder	p. 437
MGF	Guide Table	p. 441
CXSJ/CXS/CXSW	Dual Rod Cylinder	p. 443
CLG1	Fine Lock Cylinder	p. 444
CL1	Lock-up Cylinder	p. 447
CNG	Cylinder with Lock	p. 452
MWB	Cylinder with Lock	p. 455
MNB	Cylinder with Lock	p. 455
CNA2	Cylinder with Lock	p. 455
CNS	Cylinder with Lock	p. 461
CLS	Cylinder with Lock	p. 463
REAS	Sine Rodless Cylinder	p. 466
REC	Sine Cylinder	p. 467
RHC	High Power Cylinder	p. 469
RZQ	3 Position Cylinder	p. 472
MK	Rotary Clamp Cylinder/Standard	p. 476
MK2T	Rotary Clamp Cylinder/Double Guide Type	p. 481
CKQG/CKQP	Pin Clamp Cylinder	p. 484
C(L)KQG32-X2082	Pin Clamp Cylinder/Compact Cylinder Type	p. 496
RSQ	Stopper Cylinder	p. 499
RSG	Stopper Cylinder	p. 499
RSH	Heavy Duty Stopper Cylinder	p. 501
RS2H	Heavy Duty Stopper Cylinder	p. 501
MIW/MIS	Escapements	p. 504
CH□KD	JIS Standard Compact Hydraulic Cylinder	p. 506
CH□KG	Compact Hydraulic Cylinder	p. 507
CHN	Small Bore Hydraulic Cylinder	p. 508
CHSD/CHSG	ISO Standard Hydraulic Cylinder	p. 509
CH2□	JIS Standard Hydraulic Cylinder	p. 510

⚠Caution

Ask SMC for replacing a seal if a tube inside diameter is 4 mm.

Tubes with a 4 mm I.D cannot be disassembled. If they need to be disassembled in order to replace the seal or for other purposes, please contact your SMC sales representative for the repair.

1. Disassembly of the Cylinder

1-1. Cleaning
Prior to disassembly, wipe off any dirt from the outside of the actuator. This will prevent the intrusion of dust and foreign objects during disassembly.
Take particular care on the surface of the piston rod.

1-2. Removal of the retaining ring
Remove the retaining ring with an appropriate pair of pliers.

1-3. Removal of the head cover
Remove the head cover from the body by pushing the piston rod to the head side.

1-4. Disassembly
Pull out the piston rod.
Take care not to scratch or mark the internal face of the body.

2. Removal of the Seal

2-1. Rod seal
Insert a watchmaker's screwdriver, etc. from the front of the body and prise the seal out.
Take care not to scratch or score the seal groove in the body.

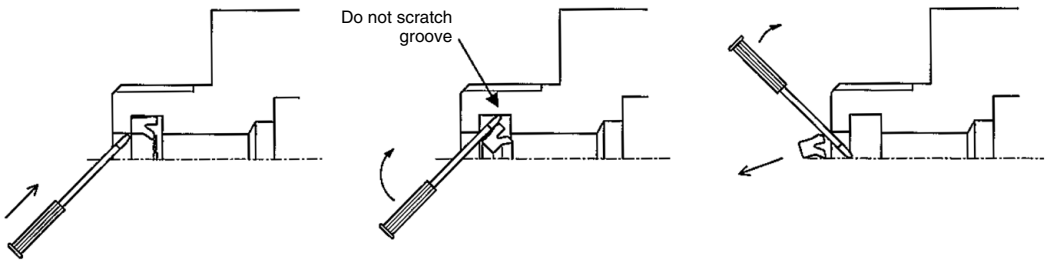

2-2. Piston seal
Push the piston seal partially to make it come off and pull it out manually.

2-3. Gasket (See right)
Push the gasket partially to make it come off and pull it out manually.

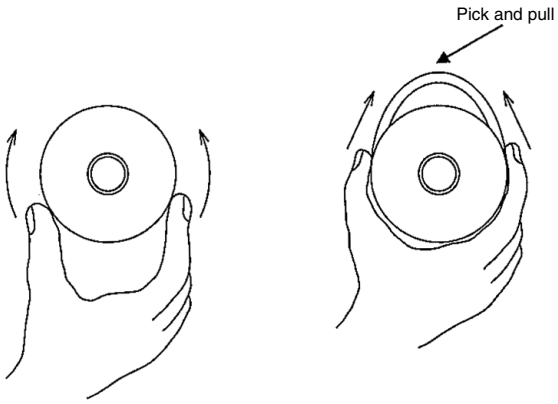

3. Application of Grease

3-1. Rod seal, piston seal
Apply the grease evenly all around the new seal.
3-2. Gasket
Spread a thin film of grease over the gasket.

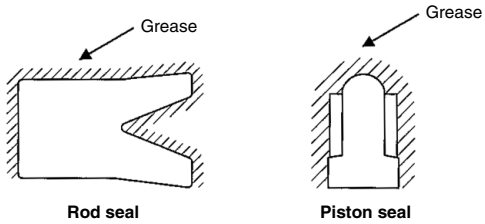

4. Mounting of the Seal

4-1. Rod seal
Mount the rod seal with attention to direction.
Then, apply the grease on the rod seal and the body bushing.
4-2. Piston seal
When mounting the seal, ensure there are no twists in the seal.
Also add the grease inside the groove.
4-3. Gasket
Pay attention not to make the gasket come off.

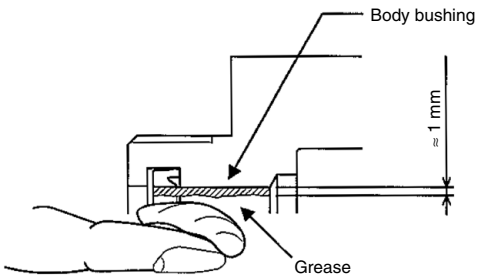

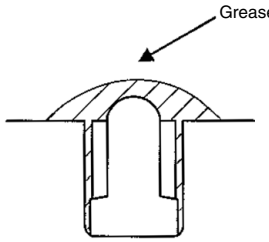

5. Application of Grease

5-1. Each component of the cylinder
Spread grease entirely over the parts shown.

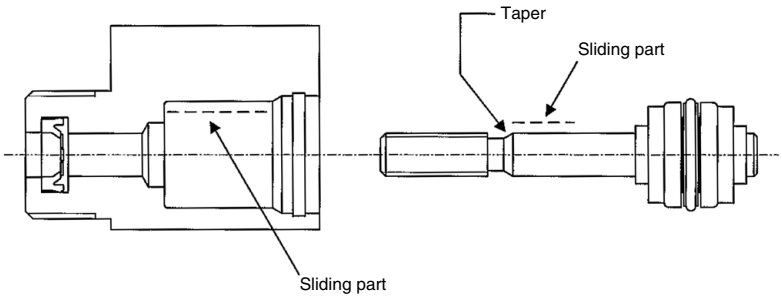

6. Reassembly of the Cylinder

6-1. Insertion of the piston rod assembly
Insert the piston rod assembly in the body.
6-2. Insertion of the head cover assembly
Insert the head cover assembly in the body.
6-3. Mounting of the retaining ring
Mount the retaining ring with an appropriate pair of pliers.
6-4. Check the assembly condition.
Confirm that there is no air leakage from the seal and that the cylinder can operate smoothly at a minimum operating pressure.

⚠ Caution

The cylinder of CM2/CVM series can not disassemble because the cover and the tube are connected by rolling caulking method.

1. Replacement of the Rod Seal

Replacement of the rod seal can be done even at the state of cylinder installed. As for replacement work, proceed as follows.

1-1. Demounting

When removing the retaining ring with a basic internal retaining ring fitting tool for hole (snap ring pliers) and pulling out the piston rod at the state of rod cover port stopped up by finger, the seal retainer and rod seal can be demounted.

1-2. Greasing

Use GR-S-010 grease for this product.

Fulling lubricate by grease on inner-and-outer peripheries of new rod seals for replacement. Moreover, fill grease into groove and slot portions.

1-3. Mounting

Mounting the rod seal with paying attention as to direction. Slowly push the rod seal with slight rotation when letting the thread part of piston rod tip and width across flat part pass through and surely install to the rod cover housing.

Then, mount in the order of the seal retainer and the retaining ring.

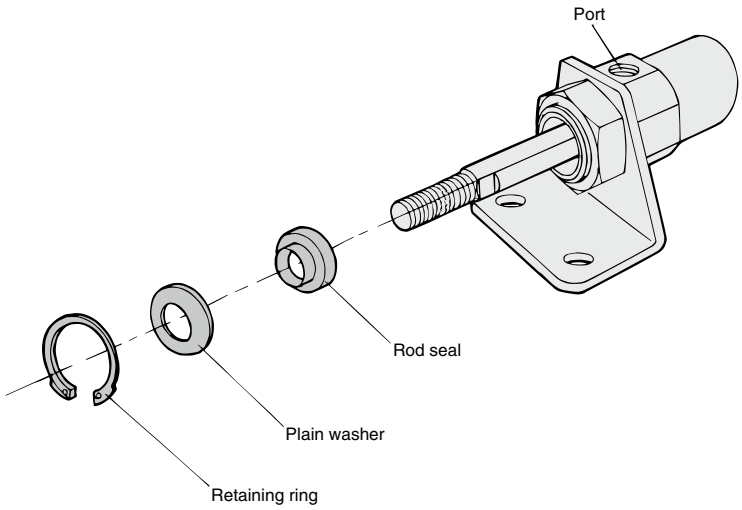

1. Replacement of the Seal

It is possible to replace the rod seal, piston seal, cylinder tube gasket for ø20 to ø40.

CBG1 Series

For ø20 to ø40, it is possible to replace the rod seal, piston seal, cylinder tube gasket, and lock piston seal.

⚠ Warning

Only people who have sufficient knowledge and experience are allowed to replace seals.

The person who disassembles and reassembles the cylinder is responsible for the safety of the product. Repeatedly disassembling and reassembling the product may cause wearing or deformation of the screws as well as a decline in screw tightening strength. When reassembling the product, be sure to check the cover and tubing screws for wear, deformities, or any other abnormalities. Operating the product with damaged screws may result in the cover or tubing coming off during operation, which could lead to a serious accident. Caution must be taken to avoid such incidents.

⚠ Caution

When replacing seals, take care not to hurt your hand or finger on the corners of parts.

2. Disassembly/Reassembly

⚠ Caution

Disassemble and assemble the cylinder in a clean area. Perform on a clean cloth.

For disassembling, hold the flats of the tube cover gently in a vice and hold the flats of the rod cover with a wrench or monkey wrench to loosen and remove the rod cover. When reassembling, tighten 0 to 2 degrees more than the original position before disassembling.
Bore size of ø50 or more cannot be disassembled because they are tightened to a high torque.
For single-acting type, please be noted that the cover might pop up due to the internal spring.

CG5-S Series

The cover and cylinder tube are tighten with Loctite 542 as seal in order to prevent from leakage. Remove old loctite completely and put new loctite when reassemble cylinder.

3. Removal of the Seal

3-1. Rod seal

Insert a watchmaker's screwdriver from the front of the cover to pull out the seal as shown in Fig. 1.

⚠ Caution

Take care not to damage the seal groove of the cover at this time.

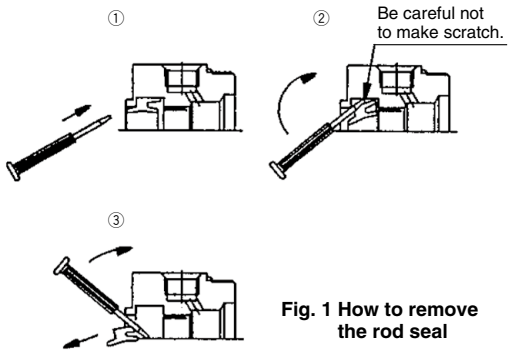

Fig. 1 How to remove the rod seal

CG5-S Series

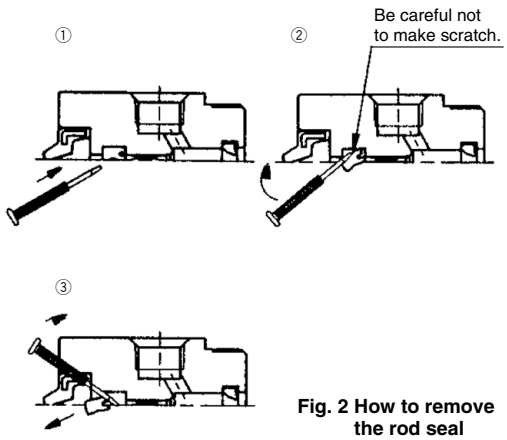

Fig. 2 How to remove the rod seal

3-2. Piston seal

Wipe off grease around the piston seal first to make removal easier.
Hold the piston seal with one hand and push it into groove so that piston seal can be lifted off and pulled out without using a watchmaker's screwdriver. (Fig. 3)

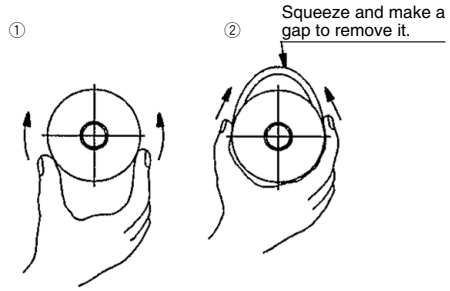

Fig. 3 How to remove the piston seal

3-3. Tube gasket
Remove the tube gasket with the watchmaker's screwdriver or the like.

3-4. Valve seal, valve retaining gasket (For the CBG1/CG5 air cushion type only)
After disassembling by referring to Fig. 4, pull out them with a watchmaker's screwdriver.

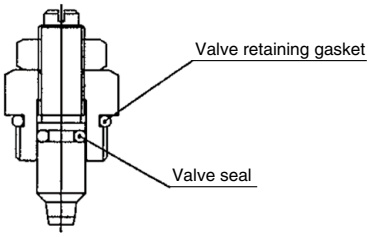

Fig. 4 Positions of the valve seal and valve retaining gasket

3-5. Lock piston seal (End lock section)

CBG1 Series

a. Insert the manual bolt through the rubber cap of the end lock unit (This is not necessary for –*L lock type).
b. Unscrew the 2 hexagon socket head cap screws and pull out the end lock unit.
c. For ø20 to ø40, remove the lock piston seal.

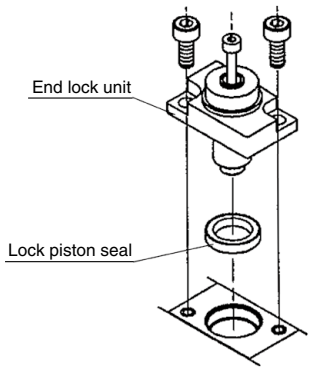

Fig. 5 How to remove the lock piston seal

4. Application of Grease

⚠Caution

For types other than the CG5:
Use JIS Class 2 lithium soap base grease.
For the CG5:
Use the specified grease.
If grease other than the specified grease is used, it may result in the malfunction of the product.
Grease pack for the CG5 part number: GR-R-010 (10 g) [Grease for food processing equipment]
Order the required number of grease packs.

4-1. Rod seal, lock piston seal
Lightly apply grease to the circumference of a new seal to make mounting easier and have better contact with the cover. Fill in the groove with grease since this is necessary for operation.

4-2. Piston seal
Lightly and evenly apply grease to the inner and outer circumferences for easier mounting on the piston.

4-3. Tube gasket
Lightly apply grease. This prevents its drop when assembling the cylinder.

4-4. Valve seal and valve retaining gasket (Air cushion type only)
Lightly apply grease. This prevents their drop when assembling the valve.

4-5. Cylinder component parts
Apply grease to each component parts of the cylinder in Fig. 6. Appendix table shows the grease amount required for a cylinder with a 100 mm stroke. For your reference, amount taken with a forefinger is about 3 (g).
L ≈ 100 mm, or stroke x $\frac{1}{2}$

CG1 Series

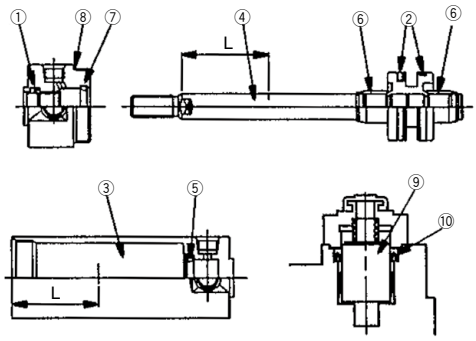

Fig. 6 Grease application points

CBG1 Series/ End lock section

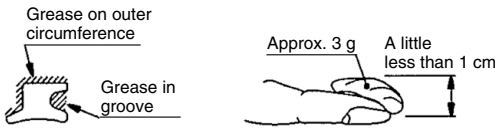

①Rod seal　　Grease amount

Grease application amount (g)

Stroke \ Bore size	ø20	ø25	ø32	ø40	Application points
100 stroke	2	3	3	3 to 4	①②③④⑤⑥⑦⑧⑨⑩
Additional 50 stroke	0.5	0.5	0.5	1	③④

∗ Rubber bumper type does not have ⑤, ⑥, and ⑦.
∗ ⑨ and ⑩ are the end lock parts of the CBG1 series.

CG3 Series

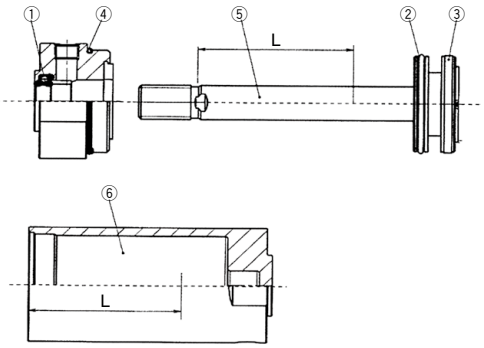

Fig. 7 Grease application points

Grease application amount (g)

Stroke \ Bore size	ø20	ø25	ø32	ø40	Position for grease
100 stroke	2	3	3	3 to 4	①②③④⑤⑥
Additional 50 stroke	0.5	0.5	0.5	1	⑤⑥

5. Mounting of the Seal

5-1. Rod seal
Be careful with the direction of seal while mounting. Apply grease to the seal and the inner circumference of the bushing as Fig. 8. For small bore sizes, use a watchmaker's screwdriver to apply grease.

5-2. Piston seal
After mounting the seal, rub grease into the seal groove and the outer circumference of the seal as Fig. 9.

5-3. Tube gasket (Excludes the CG5)
Install the tube gasket to the cover.

5-4. Valve seal, valve retaining gasket (For the CBG1/CG5 air cushion type only)
By referring to Fig. 4, install them to the specified position.

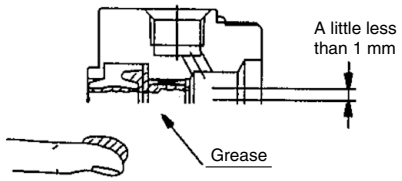

Fig. 8 Rod seal

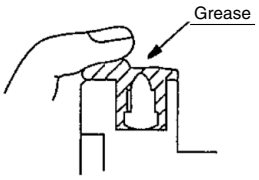

Fig. 9 Piston seal

CG5-S Series

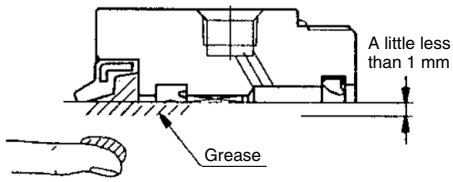

Fig. 10 Rod seal

⚠Caution

Make sure that there is nothing wrong with operation and air leakage when assembly is completed.

1. Disassembly of the Cylinder

The cylinder needs to be disassembled and assembled in a clean area.

MB/MB1 Series

For work tools, refer to the Table 1.

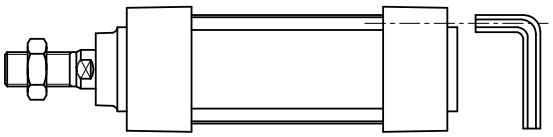

Table 1 Work tools

Bore size	Width across flats of a hexagon wrench	
	When removing the support bracket	When removing the tie-rod nut
32, 40	4	6
50, 63	5	8
80, 100	6	10
125	8	12

CA2 Series

For work tools, refer to the Table 2.

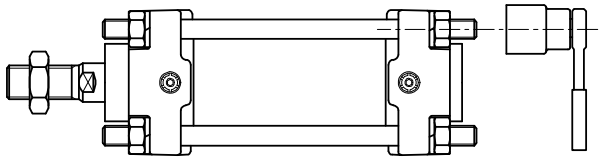

Table 2 Work tools

Bore size	Applicable socket
40, 50	13 (M8)
63	17 (M10)
80, 100	19 (M12)

2. Removal of the Seals

2-1. Rod seal, cushion seal
Insert a watchmaker's screwdriver to pull out the seals.
Take care not to damage the seal groove of the cover. (Fig. 1)

2-2. Piston seal
Remove it as in Fig. 2.

2-3. Tube gasket
Remove it in the same way as Fig. 2.

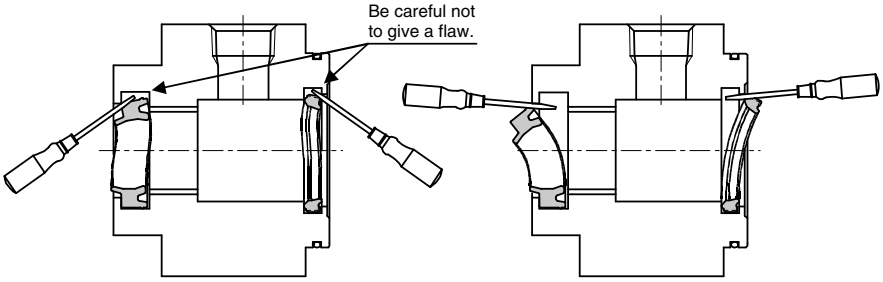

Fig. 1 Removal of the rod seal, cushion seal

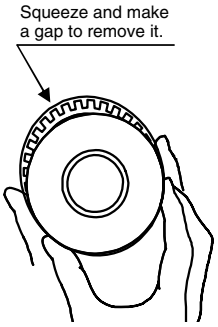

Fig. 2 Removal of the piston seal

3. Application of Grease to the Seal

3-1. Apply grease slightly to the outer circumference of each seal.
3-2. Fill in the groove of the rod seal with grease.

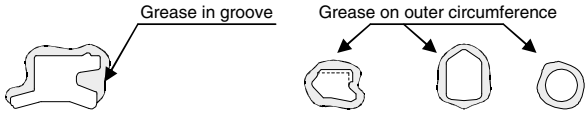

Fig. 3 Grease to the seals

4. Mounting of the Seals

4-1. Rod seal, cushion seal
Mount the seal in the correct direction by bending the seal with fingers as Fig. 4.
4-2. Piston seal
Mount the seal while stretching it as in Fig. 5.

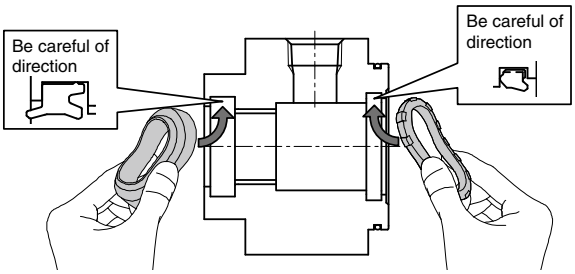

Fig. 4 Mounting of the rod seal, cushion seal

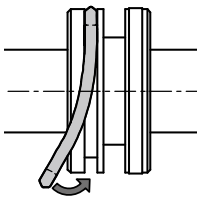

Fig. 5 Mounting of the piston seal

5. Application of Grease

5-1. Rod seal, cushion seal
Apply grease to the seal and the inner circumference of the bushing. (Fig. 6)
5-2. Piston seal
Rub grease into the seal groove and the outer circumference of the seal. (Fig. 7)
5-3. Cylinder component parts
Apply grease to each component parts of the cylinder in Fig. 9. Appendix table shows the grease amount required for a cylinder with a 100 mm stroke. For your reference, amount taken with a forefinger is about 3 g. (Fig. 8)

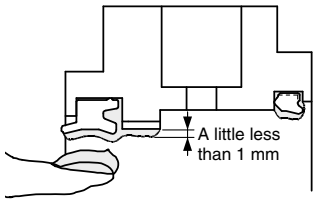

Fig. 6 Rod seal Cushion seal

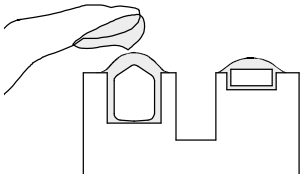

Fig. 7 Piston seal

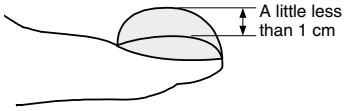

Fig. 8 Grease amount

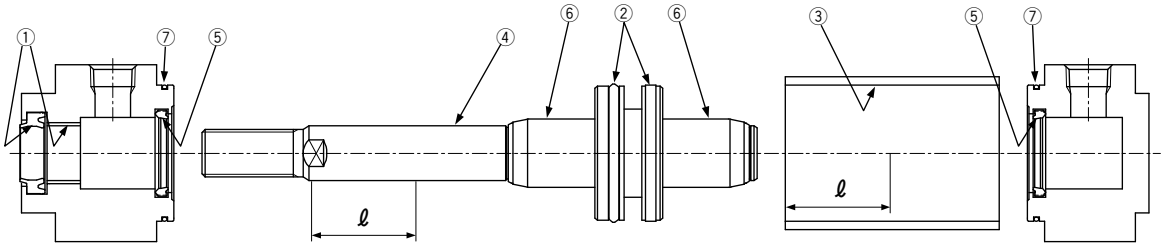

Fig. 9 Grease application points

$\ell = \frac{\text{STROKE}}{2}$ or 100 mm and more

Table 3 Grease application amount (g)

Stroke	Bore size							
	32	**40**	**50**	**63**	**80**	**100**	**125**	Application points
100 stroke	3 to 4	3 to 4	3 to 5	4 to 5	6 to 8	8 to 10	15 to 17	①②③④⑤⑥⑦
Additional 50 stroke	1	1	1	1.5	2	3	3	③④

∗ Use GR-S-010 (10 g) or GR-S-020 (20 g) grease.

6. Reassembly of the Cylinder

6-1. Make sure no particles are present. Do not scratch the seals.

6-2. To assemble the tie-rod to the cylinder, tighten the tie-rod to the shorter screw side by hand.

6-3. Set the tie-rod nuts from the cover on the opposite side. Tighten the tie-rod nut so that the tensile force is even.
Refer to the appropriate tightening torque of Table 4 and 5.
As for tightening brackets, refer to the same table.

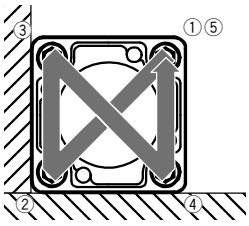

Fig. 10 Tie-rod tightening order

MB/MB1 Series

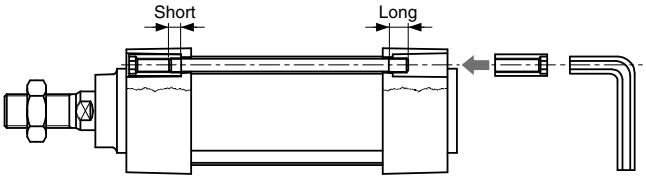

Table 4 Appropriate tightening torque

Bore size	**Appropriate tightening torque** (N·m)
32, 40	5.1
50, 63	11.0
80, 100	25.0
125	30.1

CA2 Series

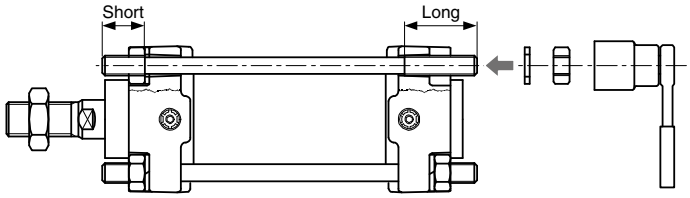

Table 5 Appropriate tightening torque

Bore size	**Appropriate tightening torque** (N·m)
40, 50	7.4
63	20
80, 100	29

1. Disassembly

1-1. Disassembly should be done in a wide space containing little dust.

1-2. After removing the cylinder, be sure to protect the end of piping port and rubber hose on the machine side with a clean cloth to prevent dust from entering.

1-3. Disassemble the unit with care to prevent damage to the sliding portion.

1-4. Check the double chamfered portion at the rod end for burrs to prevent damage to the seal and the bushing when removing the cover (push plate) from the piston rod. If burrs are found, remove them with a "file".

1-5. Loose either of nuts for tie-rod with "ratchet handle for socket wrench", "T-type slide handle for socket wrench" or "spinner handle for socket wrench", etc. and remove it from the tie-rod. Please refer to the table for "socket for socket wrench."

CS1 Series

Bore size (mm)	Nut	Applicable socket
125, 140	Class1, M14 x 1.5	JISB4636 Dodecagon 22
160	Class1, M16 x 1.5	JISB4636 Dodecagon 24
180	Class1, M18 x 1.5	JISB4636 Dodecagon 27
200	Class1, M20 x 1.5	JISB4636 Dodecagon 30
250	Class1, M24 x 1.5	JISB4636 Dodecagon 36
300	Class1, M30 x 1.5	JISB4636 Dodecagon 46

CS2 Series

Bore size (mm)	Nut	Applicable socket
125, 140	Class2, M14 x 1.5	JISB4636 Dodecagon 22
160	Class2, M16 x 1.5	JISB4636 Dodecagon 24

1-6. Remove the 4 tie-rods from the cover.

1-7. Remove the push plate (rod cover) from the piston rod with care to prevent damage to the seal and bushing.

1-8. Pull the piston rod and pull out the piston from the cylinder tube.

1-9. Remove the cylinder tube from the head cover.

1-10. Disassembly of the rod cover (For the head cover, it should also be in accordance with this procedure.)

CS1 Series

a. Remove the cylinder tube gasket. When excessive deformation or cut is found with the gasket, replace it.

b. Remove the cushion cover from the cover with a "flat head screwdriver."
(Tool: A screwdriver, Nominal size 8 x 150 Normal type, Normal class)

c. Remove the cushion valve seal from the cushion valve with a cloth.

d. Loosen the hexagon socket head cap screw for push plate by using "hexagon wrench" and remove the push plate. Applicable "Hexagon wrenches" are shown in the table below.

Bore size (mm)	Hexagon socket head cap screw	Nominal size of wrench
125, 140, 160	M8 x 1.25 x 25L	6
180, 200	M10 x 1.5 x 30L	8
250, 300	M12 x 1.75 x 35L	10

e. Remove the wiper ring. If it cannot be removed by hand, use a small "flat head screwdriver" and remove it with care to prevent damage to it.

f. Remove the rod seal by using a small "flat head screwdriver" with care to prevent damage to it.

g. Remove the push plate gasket.

h. Since the cushion seal is pressed fit, air will leak from the portion where the cushion seal is pressed fit due to damage or change in pressing force. Therefore, when the cushion seal should be replaced, the rod cover assembly and the head cover assembly should be replaced. (For those that are to be assembled with the Class 2 pressure vessel, the rod and head covers cannot be replaced. Please consult SMC as required.)

i. Since the bushing is pressed fit into the push plate, it is difficult to remove structurally and even if it is removed, stock for press fit lowers when it is pressed fit again. Therefore, when it is replaced, replace the push plate assembly.

CS2 Series

a. Remove the cylinder tube gasket. When excessive deformation or cut is found with the gasket, replace it.

b. Pick out the rod seal with a small flat head screwdriver carefully not to damage seal and rod cover.

c. Remove the cushion seal from the cover with a small flat head screwdriver carefully not to damage seal and rod cover.

d. The bushing is pressed fit to the rod cover and difficult to remove. Even if it can be removed, the allowance for press-fit is reduced, which requires the replacement as a rod cover assembly.

2. Replacement of the Seal

2-1. Removal of the seal

Please refer to “1. Disassembly” for dismantling of the wiper ring, rod seal, valve seal, tube gasket, and push plate gasket.

Since piston seal has a deep groove for sealing, use your hand (not a watchmaker’s screwdriver) and push from one side of seal and pull it out when it lifts off.

2-2. Application of grease

a. Seal: Apply thin coat of grease.

b. Cylinder component

Apply grease to the individual components as the figure below. The table shows the grease amount required for a cylinder with a 100 mm stroke.

CS1 Series

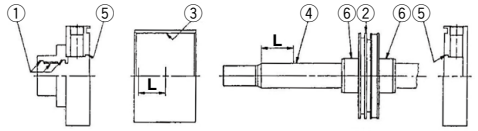

Grease application amount (g)

Bore size (mm)	125	140	160	180	200	250	300	Portion to apply
100st	15 to 17	20 to 22	24 to 26	27 to 29	30 to 32	33 to 35	36 to 38	① to ⑥
Additional 50st	3	3	3	4	4	5	5	③④

For grease, use lithium soap group grease JIS #2.

CS2 Series

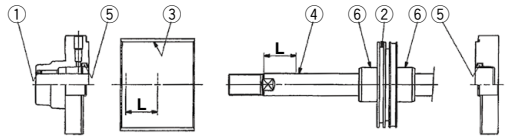

$$L = \frac{\text{STROKE}}{2} \text{ or 100 mm and more}$$

Grease application amount (g)

Bore size (mm)	125	140	160	Portion to apply
100st	15 to 17	20 to 22	24 to 26	① to ⑥
Additional 50st	3	3	3	③④

For grease, use lithium soap group grease JIS #2

2-3. Mounting of the seal

CS1 Series

a. Wiper ring/Rod seal

Mount it in correct direction.

b. Seals other than wiper ring

After mounting seals, apply grease on the inside diameter surfaces of the bushing (rubbing grease into surface).

CS2 Series

a. Cushion seal/Rod seal

Mount in correct direction.

b. Seals other than rod seal and cushion seal (Mounting directionless seals)

After mounting seals, apply grease on the inside diameter surfaces of the bushing (rubbing grease into surface).

3. Assembly

3-1. Before assembling the cylinder, be sure to clean each part to remove dust.

3-2. Before assembling the cylinder, apply enough grease to the rod, bushing, tube, and seal.

3-3. For rusty part, remove the rust completely.

3-4. Assembly should be done in a clean area with care to prevent foreign objects from entering.

3-5. Mount seal with care to prevent damage to it.

3-6. Insert the piston into the tube or rod into the bushing with care to prevent damage to each seal.

3-7. Tighten the tie-rods and bolts with the appropriate torque shown in the table below.

CS1 Series

Tightening torque (N·m)

Bore size (mm)		125	140	160	180	200	250	300
Tie-rod	Steel tube	49		75.5	103	147.1	254	451.1
	Aluminum tube	39.2		62.8	92.7	132.4	–	–
Push plate bolt		11			22		38	

CS2 Series

Tightening torque (N·m)

Bore size (mm)	125	140	160
Tightening torque	39.2		62.8

1. How to Disassemble

1-1. Disassembly

a. ø4 to ø10

Lightly hold the cylinder tube in a vice. Use a wrench on the width across flats of the rod cover and turn it counterclockwise to detach the rod cover.

b. ø12 to ø20

Remove the retaining ring with an appropriate pair of pliers (tools for installing a basic internal retaining ring).

Moreover, please note that the retaining ring comes off from pliers when detaching it, it flies, and the human body and peripherals might be disadvantaged.

1-2. Removal of the existing seal

For piston seal and tube gasket (O-ring), pick their edges and pull them out of the groove.

For rod seal, use a fine watchmaker's screwdriver to remove it from the seal groove. At that time, be careful not to scratch the inside of the groove and bearing.

2. How to Assemble

2-1. Mounting of the seal

a. Tube gasket (O-ring)

Spread the surface of the tube gasket with special grease included in a seal set and mount the gasket in the specified groove. (For double acting cylinders only.)

b. Piston seal

Fill a concavity at the side of piston seal with the special grease. Then, mount the seal in the specified groove without a twist.

c. Rod seal

Spread the entire rod seal and fill U-shape groove with the special grease. Then, mount the rod seal in the specified groove. Make sure to mount it in the right direction. (For double acting cylinders only.)

2-2. Application of grease to the cylinder tube

It is recommended that grease should be applied to cylinder tube in case of seal replacement.

Wipe existing grease with a cloth. Be careful not to scratch the inside of cylinder tube and leave out any fiber of the cloth as well. Air leakage may occur otherwise.

2-3. Assembly

a. ø4 to ø10

After attaching the piston rod assembly to the rod cover assembly, set them into cylinder tube.

Tighten the rod cover with the torque specified below.

Tightening torque

ø4	ø6	ø8	ø10
0.97 N·m ± 10%	3.08 N·m ± 10%	5.02 N·m ± 10%	5.63 N·m ± 10%

b. ø12 to ø20

After connecting the piston rod assembly to rod cover assembly, set them into cylinder tube, and install the retaining ring with an appropriate pair of pliers (tool for installing a basic internal retaining ring).

Pay attention that the ring will slip off from the pliers, and cause injury or damage to peripheral equipment. Additionally, ensure the retaining ring is mounted properly into the retaining ring groove.

3. Inspection

Inspect cylinders with replaced seal for proper operation and air leakage so as to confirm there is no defect before use.

Disassembly/Reassembly

Disassemble and assemble the cylinder in a clean area. Perform on a clean cloth.

For disassembling, hold the flats of the tube cover gently in a vice and hold the flats of the rod cover with a wrench or monkey wrench to loosen and remove the rod cover. When reassembling, tighten 2 degrees more than the original position before disassembling.

⚠ Caution

1. **For installation and removal, use an appropriate pair of pliers (tool for installing a basic internal retaining ring).**
   Even if an appropriate pair of plier (tool for installing a basic internal retaining ring) is used, it is likely to inflict damage to a human body or peripheral equipment, as a retaining ring may be flown out of the tip of a plier (tool for installing a basic internal retaining ring). Be much careful with the popping of a retaining ring. Besides, be certain that a retaining ring is placed firmly into the groove of rod cover before supplying air at the time of installment.
2. **Only people who have sufficient knowledge and experience are allowed to replace seals.**
   The person who disassembles and reassembles the cylinder is responsible for the safety of the product.
3. **When replacing seals, take care not to hurt your hand or finger on the corners of parts.**

CBQ2 Series

When more grease is needed due to the maintenance of the cylinder, etc., please order grease pack, which is available separately.
Lock holder mounting bolt is included for ø20 to ø63. Be sure to exchange it when disassembling and re-assembling the cylinder, or it may cause of the air leakage.

1. Disassembly of the Cylinder

See the structural drawing and structural parts for disassembly.

1-1. Cleaning of the external surface
Remove dusts and foreign objects from the external surfaces to prevent them from entering the cylinder during disassembly. In particular, the surface of the piston rod and the collar should be cleaned carefully.

1-2. Removal of the retaining ring
Use an appropriate pair of pliers (tool for installing a basic internal retaining ring) for removing the retaining ring. Pay attention that the ring will slip off from the end of the pliers, and cause injury or damage to peripheral equipment.

CQ2K Series

Removal of the rod cover holding bolt and the collar holding retaining ring.

a. Bore size ø12 to ø32
Remove the hexagon socket head cap screw holding the rod cover with a hexagon wrench.

b. Bore size ø40 to ø63
Remove the retaining ring with an appropriate pair of pliers (tool for installing a basic internal retaining ring), and remove the hexagon set screw on the side of the cylinder tube with a hexagon wrench (2 mm width across flats). Be careful not to let the ring slip from the end of the pliers as it may cause injury or damage to surrounding equipment.

1-3. Disassembly
Pull out the rod cover and the collar through the bolt or nut mounted on the piston rod end, and take the collar out from the piston rod. At that time, take care not to damage the internal surface of the cylinder tube and the bushing of the collar.

CBQ2 Series

a. Removal of the end lock: Fig. 1.
Lock piston seal
Insert the manual bolt and screw it in over the rubber cap of the end lock unit to the internal lock piston. (It is not necessary for –∗L. lock type)
Remove the 2 hexagon socket head cap screws and pull off the end lock unit.
As for ø20 to ø63, remove the locking piston seal.
As for ø80 and ø100, remove the seal retainer and lock piston seal.
Then, remove the lock holder mounting bolt and remove the lock unit and the gasket.

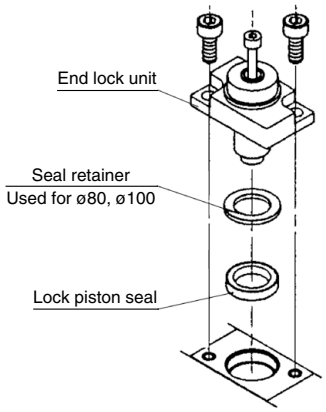

Fig. 1 How to remove the end lock

2. Removal of the Seal

2-1. Rod seal

Tool: A watchmaker's screwdriver, etc.

Insert a watchmaker's screwdriver from the front side of the cover as shown in Fig. 2.

Take care not to damage the seal groove of the cover at this time.

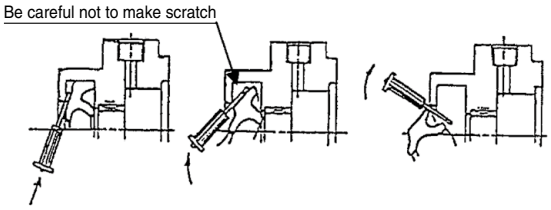

Fig. 2 Removal of the rod seal

CQ2 Series

Insert a watchmaker's screwdriver into the rod cover and collar to pull out the rod seal. Do not to damage the seal groove on the collar at this time.

2-2. Piston seal

Wipe off grease around the piston seal first to make removal easier.

Hold the piston seal with one hand and push it into groove so that piston seal can be lifted off and pulled out without using a watchmaker's screwdriver. (Fig. 3)

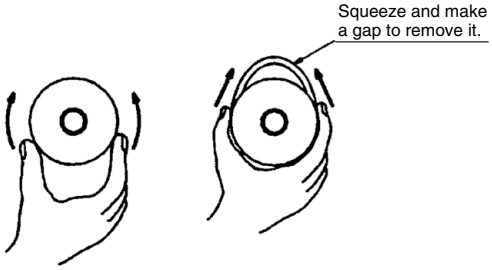

Fig. 3 Piston seal

2-3. Tube gasket

Remove the tube gasket with a watchmaker's screwdriver or the like.

3. Application of Grease

3-1. Rod seal

Apply grease around the replacement seal. Fill grease in the groove. (Fig. 4)

Fig. 4 Rod seal

3-2. Piston seal

Apply grease thinly and evenly to the external and internal peripheries of the piston seal to ensure easy fitting to the piston.

Fig. 5 Piston seal

3-3. Tube gasket

Thinly apply grease to the tube gasket. Grease will help prevention of dropping off during fitting the cylinder.

3-4. Cylinder parts

Apply grease to all points of cylinder parts as shown in Fig. 6. Grease in quantities show in Table 1 are required for each of 100 mm stroke cylinders in accordance with their diameters.

The quantity of grease taken up by the forefinger as shown in Fig. 8 is approx. 3 g.

$L \approx 100$ mm or Stroke x $\frac{1}{2}$

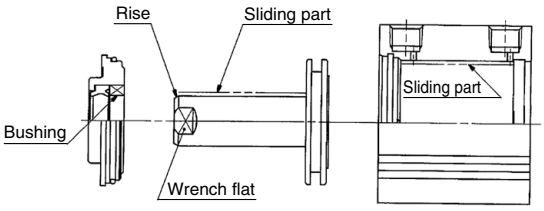

Fig. 6 Grease application points

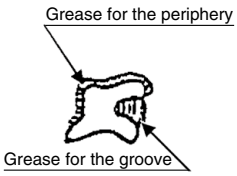

Fig. 7

Fig. 8 Grease amount

Table 1 Grease application amount (g)

Stroke \ Bore size (mm)	20	25	32	40	50	63	80	100
100 stroke	2	3	3	3 to 4	3 to 5	4 to 5	6 to 8	8 to 10
Additional 50 stroke	0.5	0.5	0.5	1	1	1.5	1.5	2

b. Apply grease to the sliding part of each part.

CQ2/RQ Series

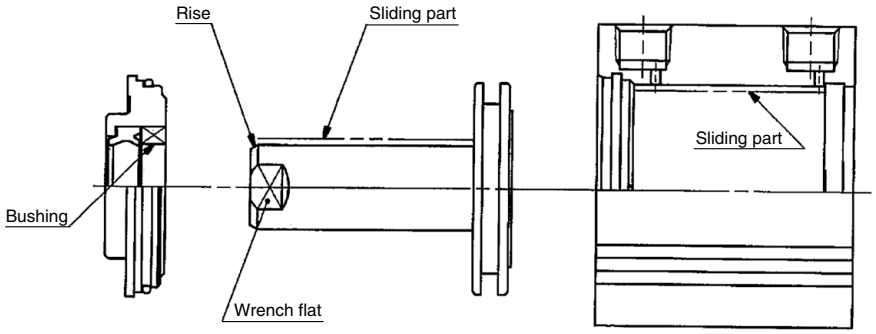

CQ2K Series

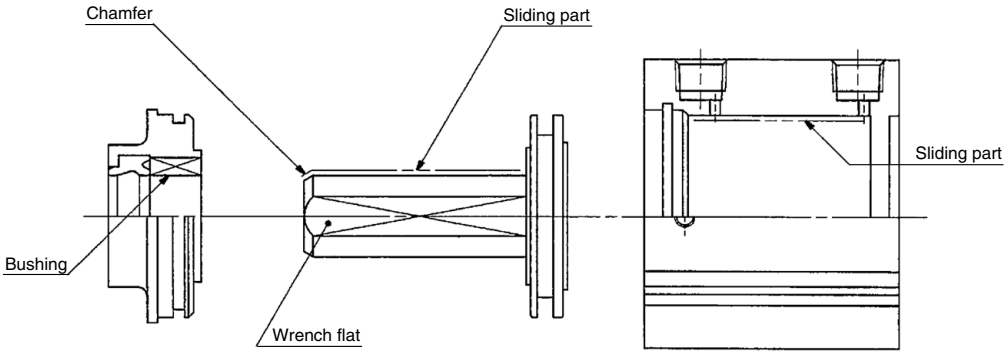

CBQ2 Series

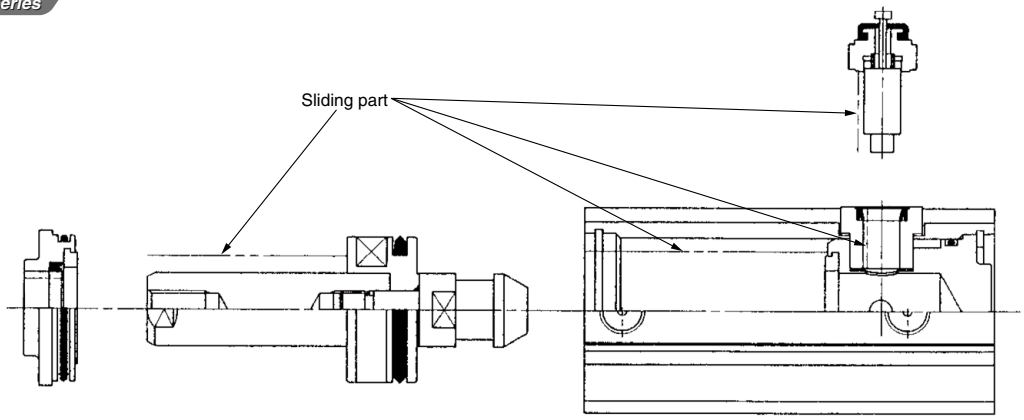

4. Mounting of the Seal

4-1. Rod seal

Mount the seal in the correct direction.

After mounting, apply grease to the seal and bushing evenly.

For small diameter cylinders, apply grease with a watchmaker's screwdriver.

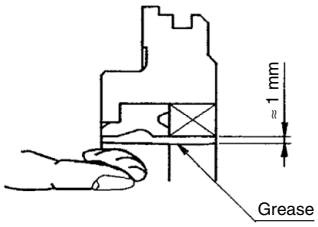

CQ2K Series

To mount the rod seal in the correct direction, the whole internal sliding surface of the guide and rod seal should be visible when looking at the rod cover assembly from the piston side.

After mounting, apply grease to the seal and bushing evenly.

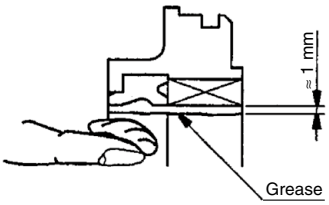

4-2. Piston seal

Mount without twisting. After mounting, apply grease to the external circumference of the seal, and the gap to the mounting groove.

4-3. Tube gasket

Mount the tube gasket on the cover.

5. Reassembly of the Cylinder

5-1. Insertion of the rod cover and collar to the piston rod
Apply grease to the piston rod end or 30° angled raise and wrench flat, and insert the collar gently with care not to damage the rod seal.

5-2. Insertion of the piston, rod cover and collar to the cylinder tube.
Apply grease to appropriate parts of the cylinder tube, and insert the piston and collar gently without any damage to them by the retaining ring groove.

5-3. Mounting of the retaining ring
Use an appropriate pair of pliers (tool for installing a basic internal retaining ring). Pay attention that the ring will slip off from the pliers, and cause injury or damage to peripheral equipment. Additionally, ensure the retaining ring is mounted properly into the retaining ring groove.

CQ2K Series

a. Mounting of the rod cover holding bolt and collar retaining ring

1) Bore size ø12 to ø32
Tighten the hexagon socket head cap screw holding the rod cover with a hexagon wrench to the recommended tightening torque. (Refer to Table for the recommended tightening torque.)

2) Bore size ø40 to ø63
Position the collar so that the hole position on the external circumference aligns with the tap of the cylinder tube, and tighten the hexagon set screw to the recommended tightening torque. (Refer to Table for the recommended tightening torque.) Use an appropriate pair of pliers (tool for installing a basic internal retaining ring). Pay attention that the ring will slip off from the pliers, and cause injury or damage to peripheral equipment. Additionally, ensure the retaining ring is mounted properly into the retaining ring groove.

Bore size (mm)		Rod cover holding hexagon socket head cap screw	Collar holding hexagon set screw	Recommended tightening torque (N·m)
12	Without auto switch	M3 x 0.5 x ∗L	–	0.59 to 1.06
	With auto switch	M2.5 x 0.45 x 6L	–	0.33 to 0.61
16	Without auto switch	M3 x 0.5 x ∗L	–	0.59 to 1.06
	With auto switch	M2.5 x 0.45 x 6L	–	0.33 to 0.61
20	Without auto switch	M5 x 0.8 x ∗L	–	2.84 to 5.10
	With auto switch	M3 x 0.5 x 10L	–	0.59 to 1.06
25	Without auto switch	M5 x 0.8 x ∗L	–	2.84 to 5.10
	With auto switch	M4 x 0.7 x 10L	–	1.37 to 2.45
32		M5 x 0.8 x ∗L	–	2.84 to 5.10
40		–	M3 x 0.5 x 4L Truncated cone point	0.20 to 0.39
50		–	M4 x 0.7 x 6L Truncated cone point	0.20 to 0.39
63		–	M4 x 0.7 x 6L Truncated cone point	0.20 to 0.39

∗ ∗L: The length of the hexagon socket head cap screw depends on the stroke.

CBQ2 Series

a. Mounting of the end lock

Apply grease to the lock piston surface and internal lock holder. Insert the gasket and lock holder, then fix them with a new hexagon socket head cap screw which is attached to the seal kit.

Insert the end lock unit and fix it with a new hexagon socket head cap screw which is attached to the seal kit. (Fig. 9, 10, 11)

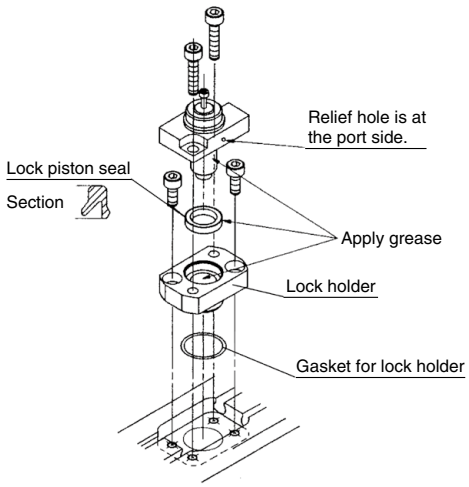

Fig. 9 Reassembling of the end lock part (ø20, ø25)

Tightening torque of bolts for the cap, lock holder

Hexagon socket head cap screw	Applicable bore size	Tightening torque
M3	ø20 to ø63	0.71 to 0.86
M5	ø80 and ø100	2.65 to 3.24

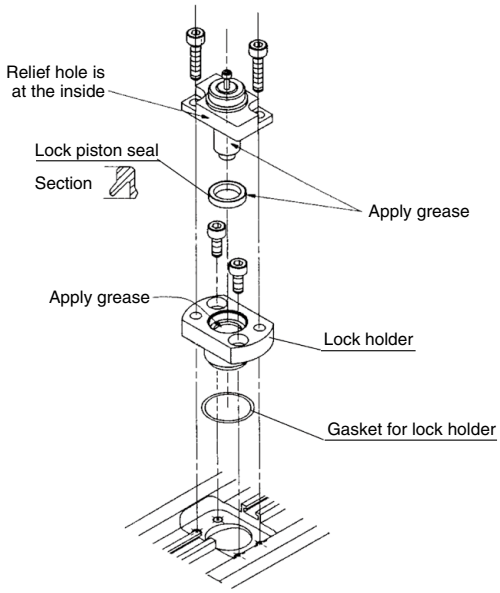

Fig. 10 Reassembling of the end lock part (ø32 to ø63)

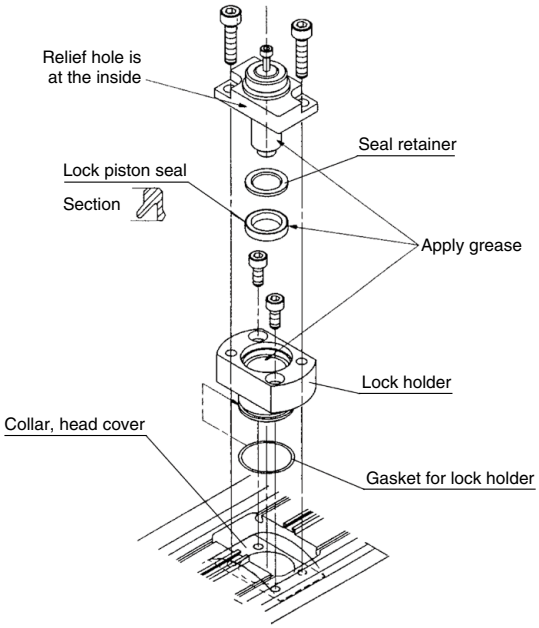

Fig. 11 Reassembling of the end lock part (ø80, ø100)

5-4. Check the assembly condition.
Confirm that there is no air leakage from the seal and that the cylinder can operate smoothly at a minimum operating pressure.

CXT Series

Replacement of the Driving Cylinder

1. Driving cylinder of this device is normal compact cylinder, so it is possible to replace it. The following is types of cylinder.

Applicable type	**Driving cylinder type**
CXT□12	CDQSB12-∗∗DC
CXT□16	CDQSB16-∗∗DC
CXT□20	CDQSB20-∗∗DC
CXT□25	CDQSB25-∗∗DC
CXT□32	CDQ2A32-∗∗DC
CXT□40	CDQ2A40-∗∗DC

Driving cylinder type ∗∗ indicates stroke.

2. Replacement procedures
Please comply with the following procedure as referring constructions on page 173.
   a. Disconnect connection between piston rod㉔ and adaptor⑩ with a wrench.
   b. Remove 4 bolts fixing plate② to the driving cylinder. Note)
   c. Replace the driving cylinder to another and fix it with 4 bolts. Please make sure that piston rod㉔ does not touch the inside of plate A② hole.
   d. Screw adapter⑩ in piston rod㉔ and tight it with a wrench.

Note) In case of a cylinder with short stroke, hexagon wrench sometimes does not apply between plate A② and slide block① due to its narrow space. In that case, replace the driving cylinder by removing plate A itself with loosening the 2 tightening bolts between plate A and guide axis④.

3. In case of replacing only seals etc. of cylinder, replace it after removing the cylinder on 2). Please refer to “Appendix. Replacement procedure of cylinder seal”

1. Disassembly of the Cylinder

1-1. Cleaning

Prior to disassembly, wipe off any dirt from the outside of the actuator. This will prevent the intrusion of dust and foreign objects during disassembly.
Take particular care on the surface of the piston rod.

1-2. Removal of the switch rail [if the switch is mounted]

Loosen the hexagon bolt and remove the switch rail and switch rail pedestal.

1-3. Removal of the rod cover

HYQ Series

Loosen the hexagon socket head cap screw and remove the rod cover.

HYC Series

Loosen the tie-rod nut and remove the rod cover.

1-4. Disassembly

Pull out the piston rod by holding a bolt or nut mounted on the piston rod end. Take care not to scratch or mark the internal face of the cylinder tube.

1-5. Removal of the head cover

HYQ Series

Loosen the hexagon socket head cap screw and remove the head cover.

HYC Series

Loosen the tie-rod nut and remove the head cover.

2. Removal of the Seal

2-1. Rod seal [Fig. 7]

Insert a watchmaker's screwdriver, etc. from behind the rod cover and prise the seal out. Take care not to scratch or score the seal groove in the rod cover.

HYQ Series

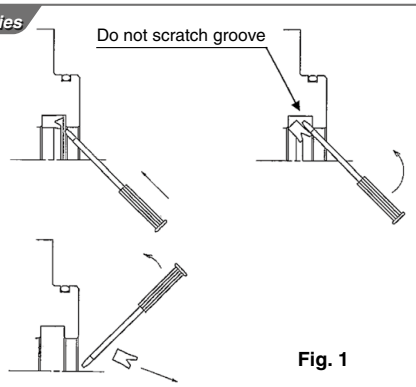

Fig. 1

HYC Series

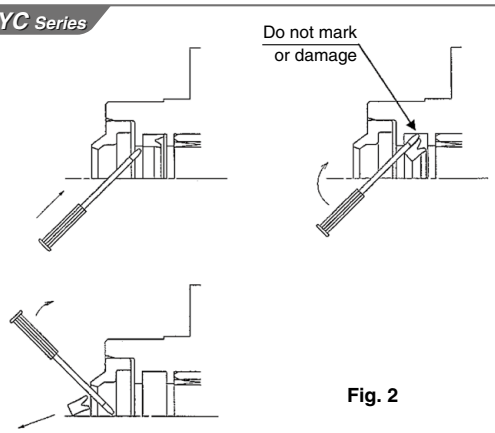

Fig. 2

2-2. Cushion seal

HYC Series

Insert a watchmaker's screwdriver, etc. from the front of the rod cover and take out. Take care not to mark or damage the seal groove of the rod cover. Likewise, insert the watchmaker's screwdriver, etc. from the front of the head cover and take out. Do not mark or damage the seal groove of the head cover. (Fig. 3)

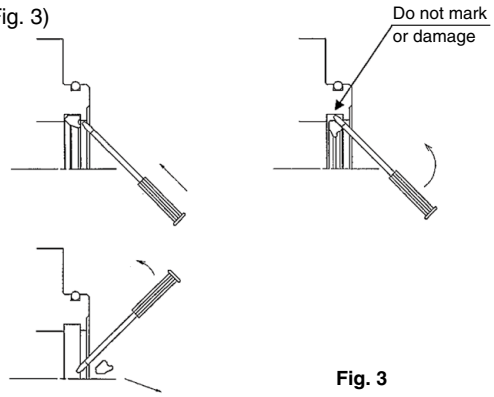

Fig. 3

2-3. Piston seal

Since the piston seal is inserted deeply, push it partially to make it come off and pull it out manually.
Do not use a watchmaker's screwdriver. (Fig. 4)

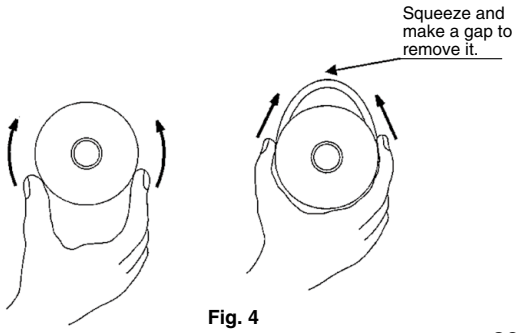

Fig. 4

2-4. Tube gasket
Push the tube gasket partially to make it come off and pull it out manually. (Fig. 4)

2-5. Needle scraper

HYC Series

Insert a tool with point end into the needle scraper and take out. Take care not to be injured. (Fig. 5)

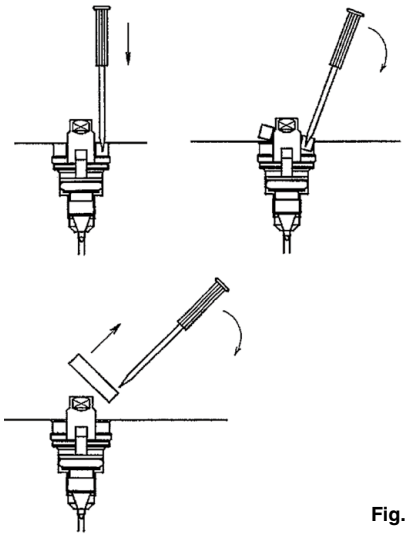

Fig. 5

3. Application of Grease

3-1. Rod seal, piston seal [Fig. 6, Fig. 7]
Apply the grease all around a new seal evenly. Also add the grease inside the groove.

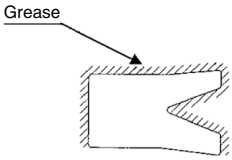

Fig. 6 Rod seal

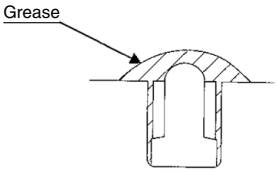

Fig. 7 Piston seal

3-2. Cushion seal [Fig. 8]

HYC Series

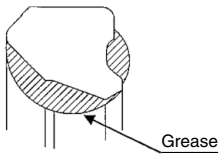

Fig. 8 Cushion seal

3-3. Tube gasket
Spread a thin film of grease over the gasket.

3-4. Rod scraper
Fill the rod scraper groove with grease. (Fig. 9)

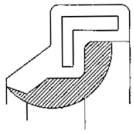

Fig. 9

3-5. Each component of the cylinder

HYQ Series

Spread grease entirely over the parts shown. (Fig. 10)

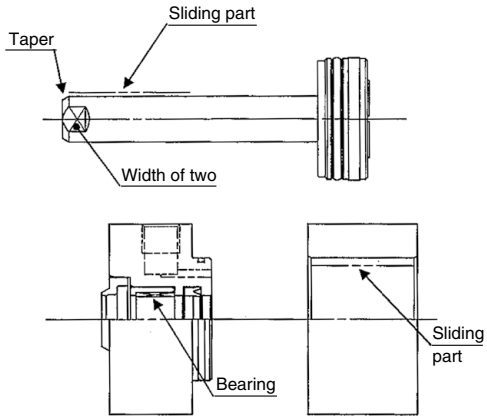

Fig. 10

HYC Series

Cover entirely with grease.

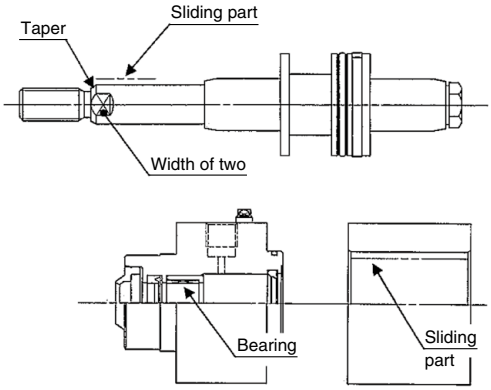

Fig. 11

4. Mounting of the Seal

4-1. Rod seal

Mount the seal with attention to direction.
Then, apply the grease on the seal and bearing evenly.

HYQ Series

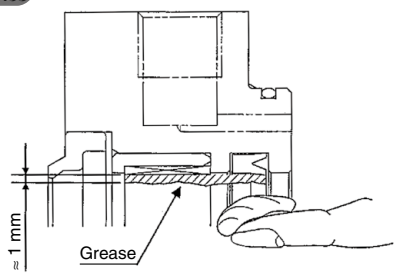

Fig. 12

HYC Series

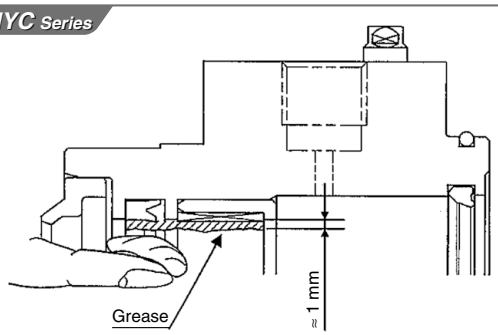

Fig. 13

4-2. Piston seal

Make sure not to twist the seal, when mounting.

4-3. Cushion seal

HYC Series

Note the direction when mounting the seal.

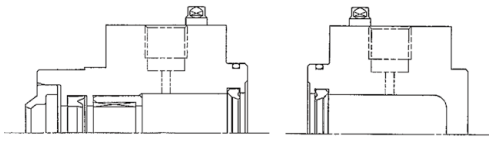

Fig. 14

4-4. Tube gasket

Pay attention not to make the gasket come off.

4-5. Needle scraper

HYC Series

Press down with hand to mount. At that time, ensure there is no protrusion from the cover end face.

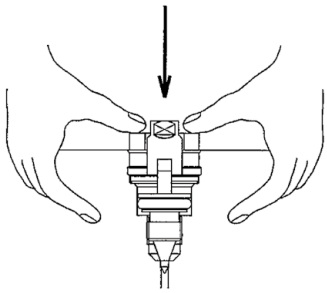

Fig. 15

5. Reassembly of the Cylinder

5-1. Tighten the head cover.

HYQ Series

Wipe off the old adhesive from the threaded part of the hexagon socket head cap screw and apply a new layer of adhesive (Loctite 242 (blue)).
Tighten the cylinder tube and head cover with a hexagon socket head cap screw.

Table 1

Applicable bore size	**Tightening torque** (N·m)
ø20	2.1 to 3.9
ø25	3.6 to 6.8
ø32	2.1 to 3.9
ø40	
ø50	3.6 to 6.8
ø63	8.8 to 16.2

HYC Series

Wipe off the adhesive from the threaded part of the tie rod bolt and apply adhesive (Loctite 242 (blue)) newly.
Tighten the cylinder tube and the head cover with a tie-rod bolt.

Table 2

Applicable bore size	**Tightening torque** (N·m)
ø32	8.8 to 16.2
ø40	
ø50	17.2 to 31.8
ø63	

5-2. Inset the rod assembly into the cylinder tube.

Apply the grease to the part receiving the cylinder tube and insert the rod assembly carefully and slowly make sure the piston seal and gasket are not damaged.

5-3. Tighten the rod cover.

HYQ Series

Wipe off the old adhesive from the threaded part of the hexagon socket head cap screw, and apply a new layer of adhesive (Loctite 243 (blue)).
Tighten the cylinder tube and rod cover with a hexagon socket head cap screw. (Tightening torque: Refer to Table 1)

HYC Series

Wipe off the adhesive from the threaded part of the tie-rod bolt and apply adhesive (Loctite 243 (blue)) newly.
Tighten the cylinder tube and rod cover with a tie-rod bolt. (Tightening torque: Refer to Table 2)

5-4. Mount the switch rail (if the switch is mounted).

Applicable bore size	**Tightening torque** (N·m)
ø20 to ø63	1.1 to 1.9

5-5. Check the assembly condition.
Confirm there is no air leakage from the seal and the cylinder can operate smoothly at a minimum operating pressure.

⚠ Caution

Ask SMC for replacing a seal if a tube inside diameter has 40 mm or more.

The cylinder with internal diameter of 40 mm or more has extremely large tightening torque at the rod cover.
Therefore, if the cylinder needs to be disassembled for replacing a seal, ask SMC for the work.
SMC can supply a seal kit. However, if the cylinder results in failure or damage after it is disassembled by the other party than SMC, we cannot compensate such failure.

1. Disassembly of the Cylinder

1-1. Cleaning
Prior to disassembly, wipe off any dirt from the outside of the actuator. This will prevent intrusion of dust and foreign objects during disassembly.
Take particular care on the surface of the piston rod and guide rod.

1-2. Removal of the assembly
Fix the chamfer on the piston rod, which is retracted, with a wrench, and remove a fixing bolt from a plate by turning the piston rod.

1-3. Removal of the rod cover assembly
Remove the rod cover assembly by rotating the chamfer on the rod cover.

1-4. Disassembly
Pull out the piston rod by holding a nut mounted on the Tightening bolt end. Take care not to scratch or mark the internal face of the body tube.

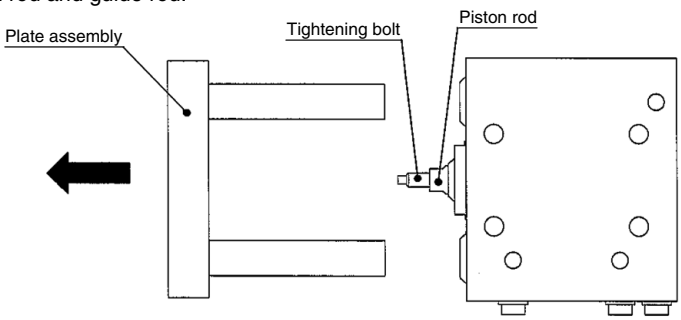

2. Removal of the Seal

2-1. Rod seal
Insert a precision driver etc. from behind the rod cover and prise the seal out. Take care not to scratch or score the seal groove in the rod cover.

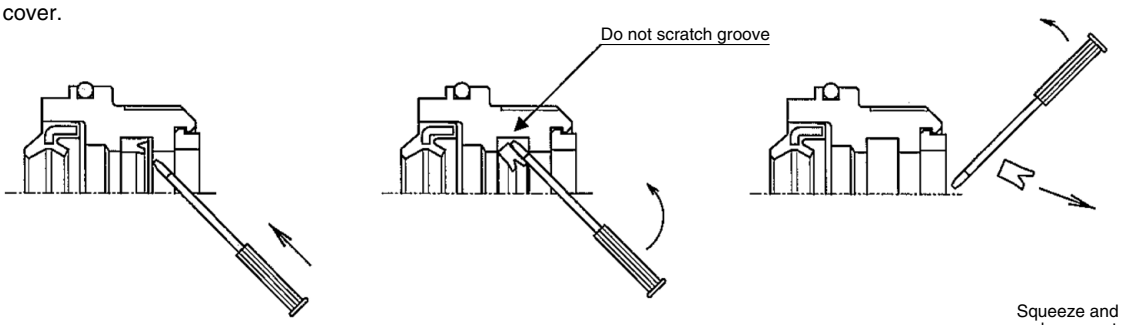

2-2. O-ring (rod side) [Fig. 1]
Push the tube gasket partially to make it come off and pull it out manually.

2-3. Piston seal [Fig. 1]
Since the piston seal is inserted deeply, push it partially to make it come off and pull it out manually. Do not use a precision driver.

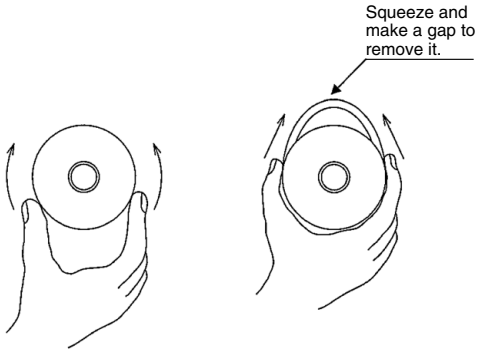

Fig. 1

3. Application of Grease

3-1. Rod seal, piston seal
Apply the grease all around a new seal evenly. Also add the grease inside the groove.
3-2. O-ring (rod side)
Spread a thin film of grease over the gasket.

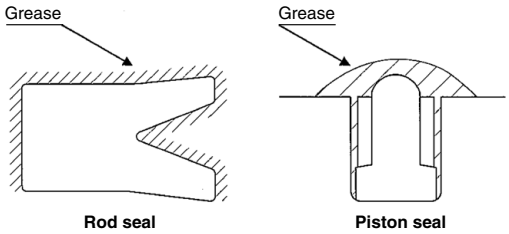

3-3. Scraper
Fill the scraper (part of piston rod and guide rod) groove with grease.

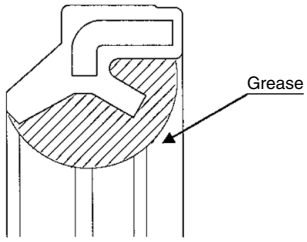

3-4. Each component of the cylinder
Spread grease entirely over the parts shown.

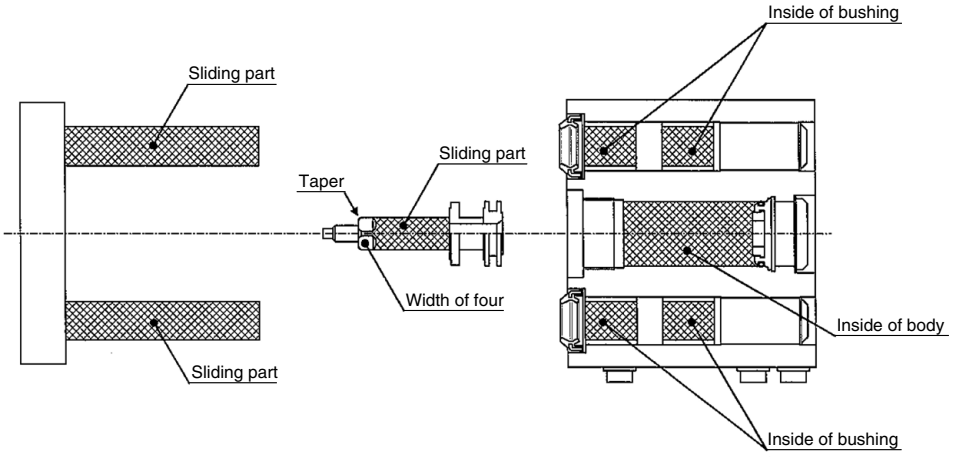

4. Mounting of the Seal

4-1. Rod seal
Mount the seal with attention to direction.
Then, apply the grease on the seal evenly.
4-2. Piston seal
When mounting the seal, ensure there are no twists in the seal.
4-3. O-ring (rod side)
Pay attention not to make the gasket come off.

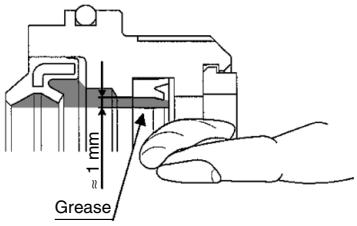

5. Reassembly of the Cylinder

5-1. Insert the piston rod assembly into the body.
Insert the piston rod assembly carefully and slowly, so as not to damage the piston seal.

5-2. Tighten the rod cover.
Tighten the rod cover and the body. (Tightening torque: Refer to Table 1)
O-ring must be fit in a groove correctly, and must not be torn out.

5-3. Tighten the plate assembly
Apply adhesive on a thread hole on a plate. (Kind of adhesive: Loctite 263 [red])
Insert the guide rod of the plate assembly into the body.
Fixing the chamfer on the piston rod with a wrench, tighten the tightening bolt and the plate assembly by rotating the piston rod.
(Tightening torque: Refer to Table 2)

5-4. Check the assembly condition.
Confirm there is no air leakage from the seal and the cylinder can operate smoothly at a minimum operating pressure.

Table 1

Bore size (mm)	Tightening torque (N·m)
20	140
25	260
32	500

Table 2

Bore size (mm)	Tightening torque (N·m)
20	2.1 to 3.9
25	3.7 to 6.7
32	8.8 to 16.2

The products in this series are refreshed products.
Check the following before ordering.
• Previous series (Discontinued product) MY1B ➡ p. 124
• Checking whether the cylinder is a new or a previous model ➡ p. 769, 770

1. Disassembly

a. Remove the thin head screws on the top surface of the head cover (in 2 locations on each side, 4 in total), and then remove the head plate and belt clamp. (Refer to Fig. 1.)
b. Remove the holding bolts on the end cover (on both sides of the slider), and then remove the end cover. (Refer to Fig. 1.)
(In some cases, when removing the end cover, the spacer, stopper, or double round parallel key may fall out. Be sure not to lose these components.)
c. Remove the top cover.

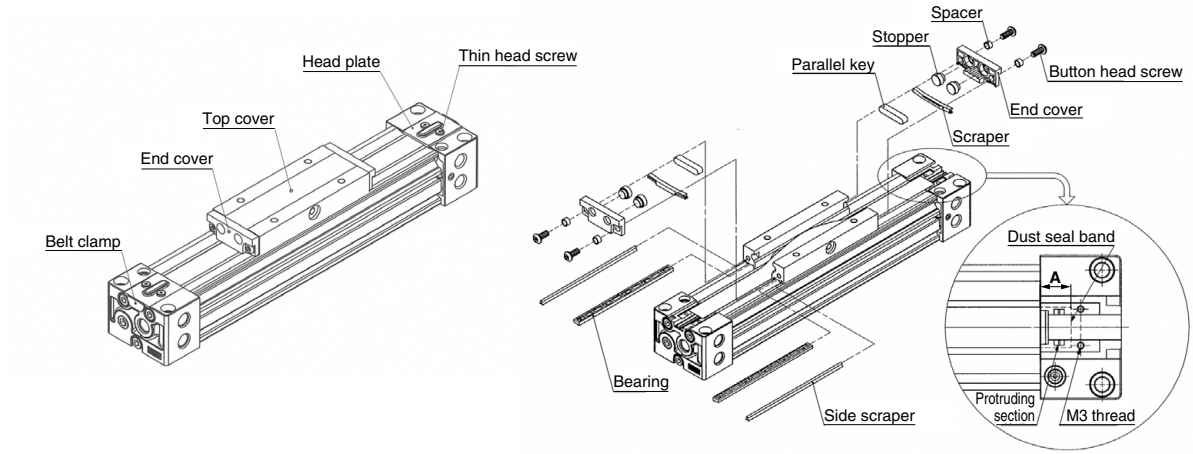

Fig. 1

2. Assembly

a. Install the dust seal band (Table 1), which has been coated with grease on both sides, so that its end surface is in the middle between the M3 thread on the top surface of the head cover and the protruding section. (Recommended position: the A dimension) (Refer to Fig. 2.)

Table 1. Dust seal band standard list

Bore size (mm)	Part number	Standard length
25	**MY1B25-16B-Stroke**	(Stroke + 184) 0/–2
32	**MY1B32-16B-Stroke**	(Stroke + 242) 0/–2
40	**MY1B40-16B-Stroke**	(Stroke + 286) 0/–2

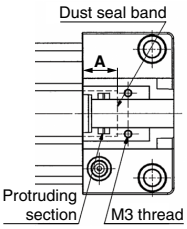

Fig. 2

Dust seal band end surface installation position

Bore size (mm)	A
25	12
32	18
40	18

b. Attach the double round parallel key, and then attach the end cover, spacer, and stopper with holding bolts. (Refer to Table 2 for the end cover tightening torque.)
(When attaching the end cover, be sure to leave about 1 mm clearance between the bottom of the end cover and the top surface of the cylinder tube.) (Refer to Fig. 3.)

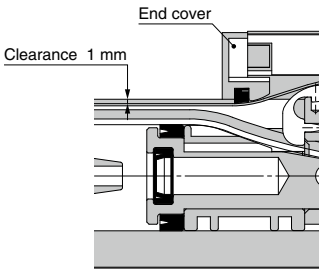

Fig. 3

Table 2. End cover holding hexagon socket button head screw size, Tightening torque

Bore size (mm)	Size	Torque value (N·m)
25	M4	0.7
32	M4	0.7
40	M4	0.7

c. Attach one side of the dust seal band, the belt clamp and the head plate with thin head screws. (Refer to Fig. 4.) (Refer to Table 2 for the thin head screw tightening torque.)

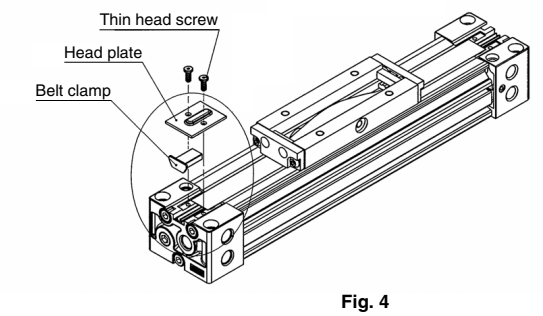

Fig. 4

Table 2. Head plate holding thin head screw size, Tightening torque

Bore size (mm)	Size	Torque value (N·m)
25	M3	0.63
32	M3	0.63
40	M3	0.63

d. After attaching one side of the dust seal band, operate the cylinder a few times (3 to 4 times), and then check the dust seal band for sagging.
e. Attach the other side of the dust seal band and the other belt clamp to the head plate with thin head screws.
f. Attach the top cover, manually operate the cylinder a few times, and then check the dust seal band for rising or sagging.

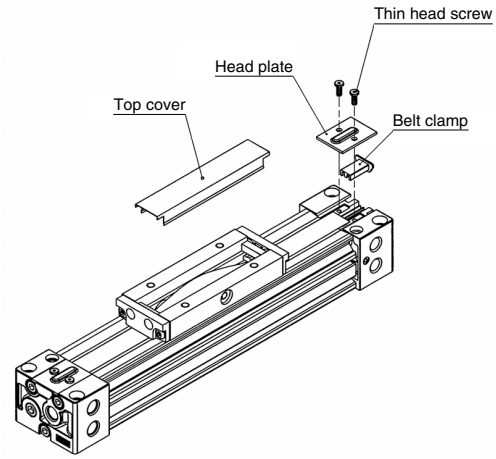

1. Disassembly

a. Loosen the 2 set screws at one side. That is, 4 set screws (within dotted line) both sides totally for 3 rotations.
b. Remove the end cover by removing the 2 hexagon socket button head screws for fixing on the end cover (at both sides of the slider).
c. Remove the opposite end cover in the same way.
d. Remove the top cover.
e. Pull out the dust seal band at this condition.

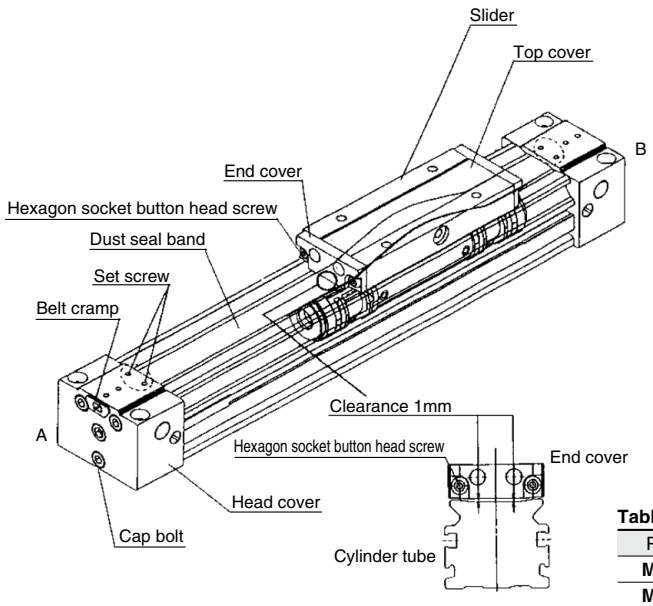

Fig. 1

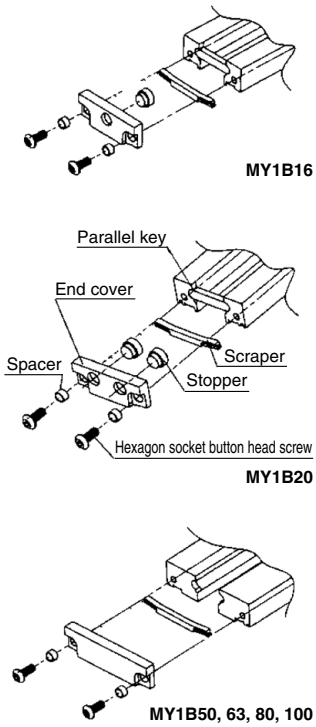

Fig. 2

Table 1. Dust seal band standard list

Part number	Standard length	Part number	Standard length
MY10-16B-st	st + 110 $^{0}_{-1}$	**MY63-16B-st**	st + 382 $^{+2}_{0}$
MY16-16B-st	st + 160 $^{0}_{-1}$	**MY80-16B-st**	st + 544 $^{+2}_{0}$
MY20-16B-st	st + 200 $^{0}_{-1}$	**MY100-16B-st**	st + 634 $^{+2}_{0}$
MY50-16B-st	st + 328 $^{+2}_{0}$		

Note) 2 type of dust seal bands are available and the part no. depends on treatment of setscrew.
•Black zinc chromated → MY ∗∗-16B-st
•Nickel plating → MY∗∗-16BW-st

2. Assembly

a. Be sure to mark both ends of the replacement dust seal band in the manner shown in Fig. 4 before applying grease to the entire band (Note 1). (Length of dust seal band is defined as regulated. But check the length again before mounting for shipping.)
b. Put the dust seal band for replacement in slider.
c. Fix the end cover assembly so that clearance between the end cover assembly and the cylinder tube is about 1 mm. In that case, a proper tightening torque of the hexagon socket button bolt is regulated by values shown in table. 2. Fix the opposite end cover as same way. (Fig. 2) In case of fixing the end cover, ensure that the spacer, stopper and parallel key are installed.
d. Insert both dust seal band into the head cover up to line (10 mm). At the same time, put the dust seal band in the groove of cylinder tube while stretching the dust seal band. Also, as the stainless plate of the dust seal band is as thin as 0.1 mm, be careful not to bend it or break in insertion.

Table 2. Tightening torque of hexagon socket button head screw

Diameter	Bolt size	Tightening torque (N·m)
10		
16, 20	M3 x 0.5	0.3
50, 63, 80, 100	M5 x 0.8	1.5

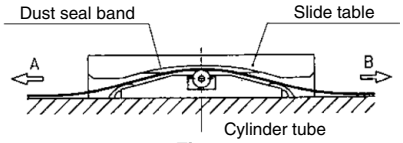

Fig. 3

∗For ø10, ø80 and ø100, the dust seal band is magnetic hold type. Set the dust seal band on the cylinder tube with equivalent clearance W_1 and W_2. (Fig. 5) Another work is same way as above 4.

e. Tighten only the 2 set screws at A side after installation. In that case, adjust so that dust seal band located near screws does not lift due to excessive tightening. Proper tightening torque is 0.1 N·m (1 kgf·cm).

f. Reciprocate the slider 3 to 4 times up to both stroke ends to remove sagging of the dust seal band.

g. Be sure to return the slider up to B side stroke end and tighten at B side in the same way after ensuring that dust seal band is inserted into the head cover for approx. 10 mm.

h. Install the top cover.

i. Reciprocate the slider a few times manually again.
If the seal band does not lift, installation will complete.

Note 1) For grease, use lithium soap grease with consistency No. 1 or No. 2.

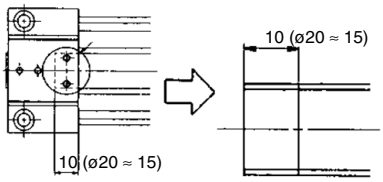

Fig. 4

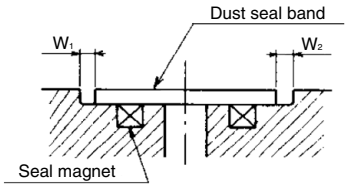

Fig. 5

Maintenance

Monthly application of grease to the slide bearing and the dust seal band may lengthen the life.
Grease pack is recommended. (Grease pack part no.: GR-S-010)

1. Refer to Replacement Procedure of MY1M/C Dust Seal Band.
2. How to install the cylinder with the cover
   Refer to Installation Procedure for MY1□W.
3. How to install the side seal of the cylinder with cover.
   Refer to Mounting Procedure for MY1□WK side seal.

1. Replacement of the Dust Seal Band

MY1M/C Series

1. Disassembly
   a. Loosen the 2 set screws at one side, that is, 4 set screws at both sides.
   b. Remove the end cover by removing the 2 (4) hexagon socket button head screws for fixing which are on the end cover.
   c. Remove the opposite end cover in the same way.
   d. Pull out the dust seal band in this condition.

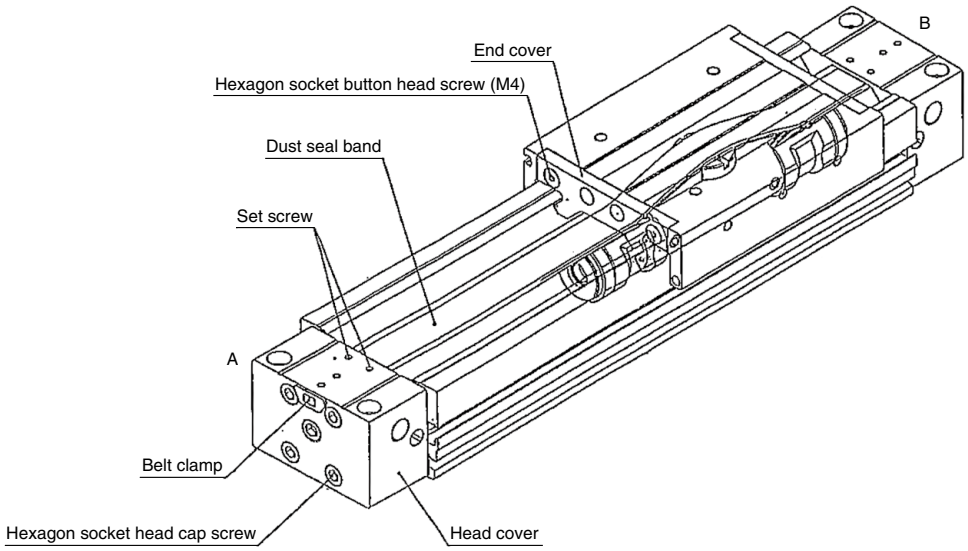

Table. 1 Dust seal band standard list

Model number	Standard length
MY16-16B-st	st + 160 $^{+2}_{0}$
MY20-16B-st	st + 200 $^{+2}_{0}$
MY25-16B-st	st + 182 $^{+2}_{0}$
MY32-16B-st	st + 228 $^{+2}_{0}$
MY40-16B-st	st + 272 $^{+2}_{0}$
MY50-16B-st	st + 328 $^{+2}_{0}$
MY63-16B-st	st + 382 $^{+2}_{0}$

Note) 2 type of dust seal bands are available and the part no. depends on treatment of set screw.
Black zinc chromated → MY□□-16B-st
Nickel plating → MY□□-16BW-st

2. Assembly
   a. After first performing the additional process shown in Fig. 2, be sure to apply grease to the entire replacement dust seal band in the manner shown in Fig. 1 (Note 1).
   b. The dust seal band for replacement is pierced the slide table.
   c. The end cover is fixed so that the clearance between the end cover assembly bottom part and the cylinder tube upper surface is about 1 mm.
      The adequate tightening torque at this time is 0.7 N·m (7 kgf·cm).
      The opposite end cover is fixed in the same way.
   d. The dust seal bands of both sides are inserted in the head cover to the position drawn with a pen (about 10 mm). Then, at the same time, insert the dust seal band in the groove of cylinder tube by pulling it to both sides. (Fig. 4)
   e. If the dust seal band is installed properly without coming to the surface, tighten two set screws at A side. Adequate tightening torque is 0.1 N·m (1 kgf·cm).
   f. Reciprocate the slide table 3 or 4 times to both stroke ends in order to remove the sag of the dust seal band.
   g. Be sure to return the slide table to B side stroke end and tighten the set screw at B side after ensuring that the dust seal band is inserted in the head cover of about 10 mm.
   h. Reciprocate the slide table again manually a few times and ensure that the dust seal band does not come to the surface.

Note 1) Apply grease evenly as the drawing 1. Use consistency No. 1 or No. 2 of the lithium soap grease.

Table. 2 Tightening torque of button bolt

Diameter	Bolt size	Tightening torque (N·m)
16, 20	M3 x 0.5	0.3
25, 32, 40	M4 x 0.7	0.7
50, 63	M5 x 0.8	1.5

Grease application amount (Shaded portion) ≈ 0.3mm

Fig. 1

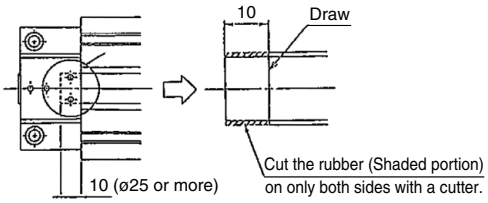

Fig. 2

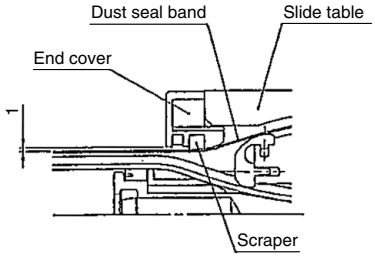

Fig. 3

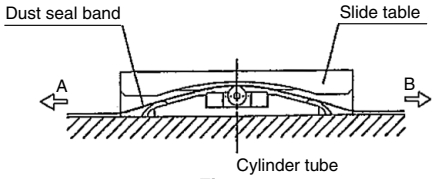

Fig. 4

2. Installation

MY1□W Series

1. Removal of the cover
   a. Remove the hexagon socket button head screw to remove the cover.

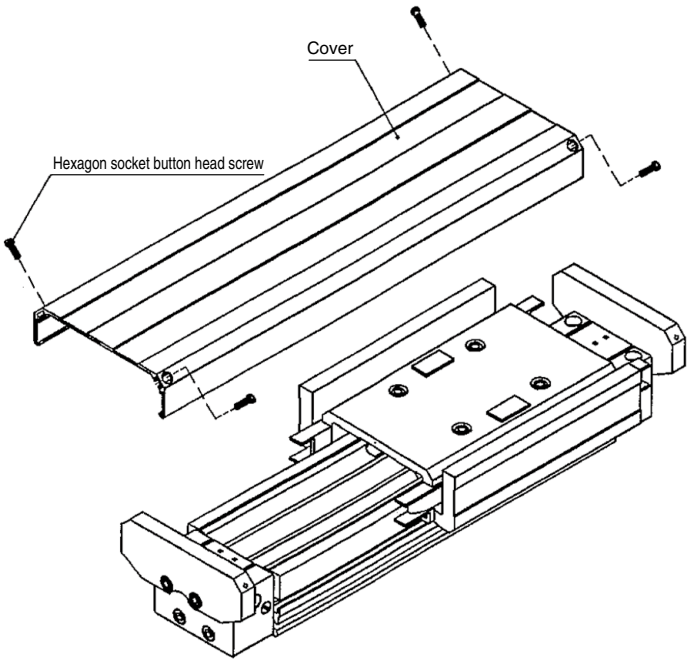

2. Installation, adjustment
   a. Install the body.
   b. When the body is equipped only with a cover, the installation is completed when the cover is mounted after the installation and adjustment.

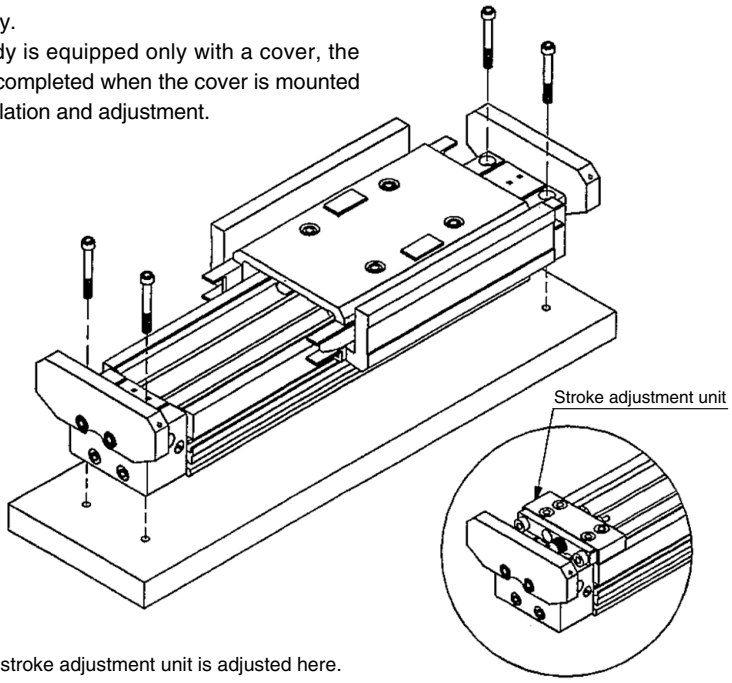

Note) The optional stroke adjustment unit is adjusted here.

3. Installation of the Side Seal

MY1□WK Series

1. End plate removal procedure
   a. Remove the 2 hexagon socket head cap screws and the 2 hexagon socket button head screws.
   b. Remove the end plate on one end.

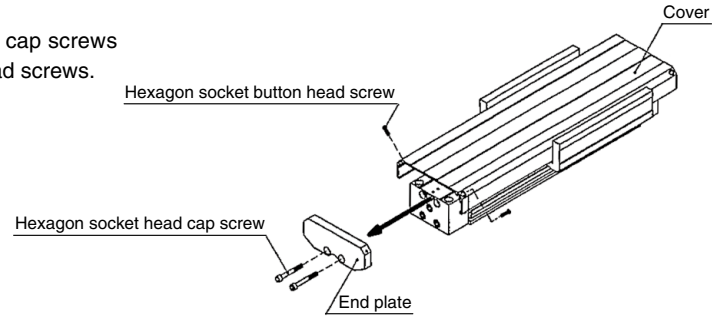

2. Installation of the side seal
   a. Insert the side seal assembly from the end surface.
   Note) The stainless part of the side seal assembly is very sharp. It should be handled with care.

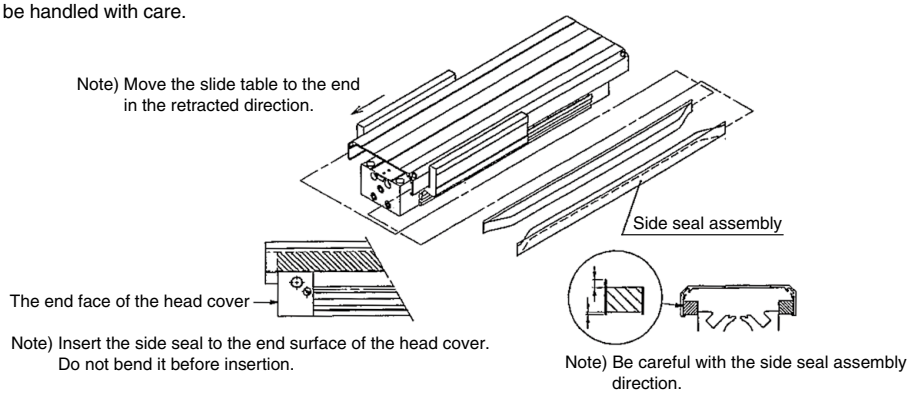

3. Assembly of the cover
   a. Mount the end plate and fix it.

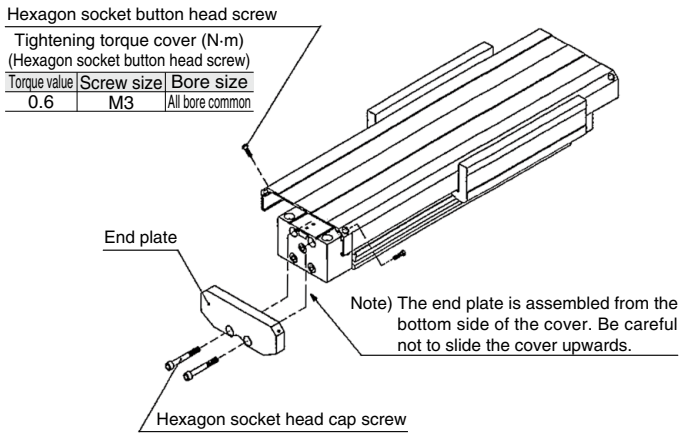

Tightening torque cover (N·m)
(Hexagon socket button head screw)

Torque value	Screw size	Bore size
0.6	M3	All bore common

Tightening torque cover (N·m)
(Hexagon socket head cap screw)

Bore size	Screw size	Torque value
ø16	M3	0.6
ø20	M4	1.4
ø25	M5	2.8
ø32	M6	4.8
ø40	M6	4.8

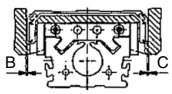

Note) The clearance of B and C part has to be checked at the full stroke. If there is contact, the clearance should be adjusted by loosening the hexagon head cap screw and retightening it.

1. Disassembly

a. Remove the thin head screws on the top surface of the head cover (in 2 locations on each side, 4 in total), and then remove the head plate and belt clamp. (Refer to Fig. 1.)

b. Remove the holding bolts on the end cover (on both sides of the slider), and then remove the end cover. (Refer to Fig. 1.) (In some cases, when removing the end cover, the spacer, stopper, bearing, or side scraper may fall out. Be sure not to lose these components.)

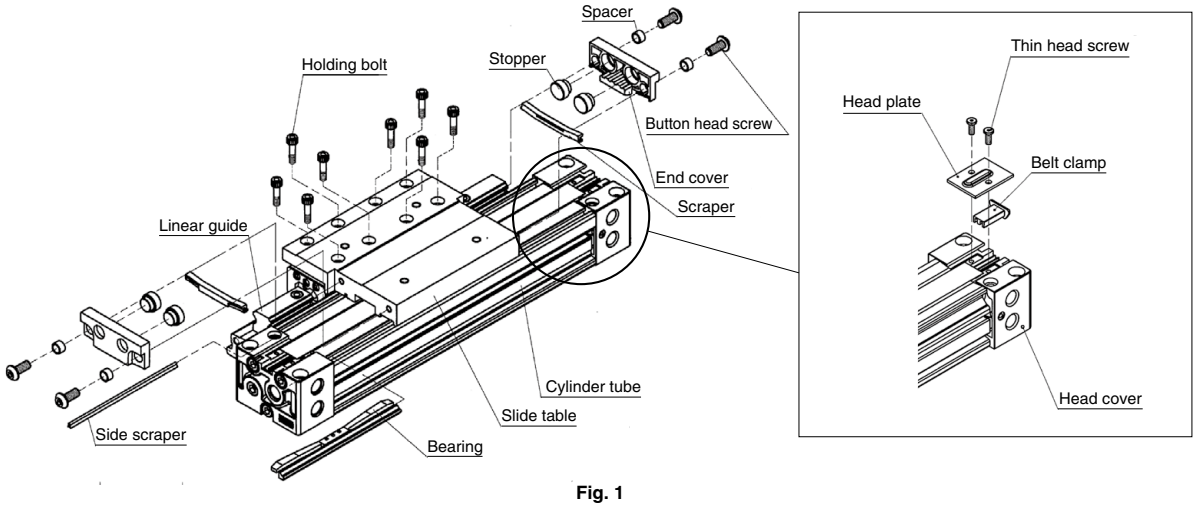

Fig. 1

2. Assembly

a. Install the dust seal band (Table 1), which has been coated with grease on both sides, so that its end surface is in the middle between the M3 thread on the top surface of the head cover and the protruding section. (Recommended position: the A dimension) (Refer to Fig. 2.)

Table 1. Dust seal band standard list

Bore size (mm)	Part number	Standard length
25	**MY1B25-16B-Stroke**	(Stroke + 184) 0/–2
32	**MY1B32-16B-Stroke**	(Stroke + 242) 0/–2
40	**MY1B40-16B-Stroke**	(Stroke + 286) 0/–2

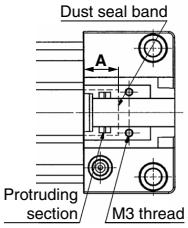

Fig. 2

Dust seal band end surface installation position

Bore size (mm)	A
25	12
32	18
40	18

b. Attach the end cover, spacer, and stopper with holding bolts. (Refer to Table 2 for the end cover tightening torque.)

∗ When attaching the end cover, be sure to leave about 1 mm clearance between the bottom of the end cover and the top surface of the cylinder tube. (Refer to Fig. 3.)

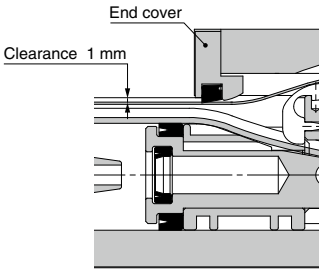

Fig. 3

Table 2. End cover holding hexagon socket button head screw size, Tightening torque

Bore size (mm)	Size	Torque value (N·m)
25	M4	0.7
32	M4	0.7
40	M4	0.7

c. Attach one side of the dust seal band, the belt clamp and the head plate with thin head screws. (Refer to Fig. 4.) (Refer to Table 2 for the thin head screw tightening torque.)

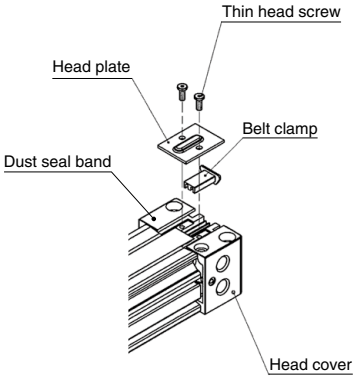

Fig. 4

Table 2. Head plate holding thin head screw size, Tightening torque

Bore size (mm)	Size	Torque value (N·m)
25	M3	0.63
32	M3	0.63
40	M3	0.63

d. After attaching one side of the dust seal band, operate the cylinder a few times (3 to 4 times), and then check the dust seal band for sagging.
e. Attach the other side of the dust seal band and the other belt clamp to the head plate with thin head screws.
f. After manually operating the cylinder a few times, if there is no rising or sagging of the dust seal band, the process is complete.

1. Disassembly

a. Loosen the 2 set screws at one side, that is, 4 set screws at both sides.
b. Remove the end cover by removing the 2 (4) bolts with a hexagon hole fixing which are on the end cover.
c. Remove the opposite end cover in the same way.
d. Pull out the dust seal band in this condition.

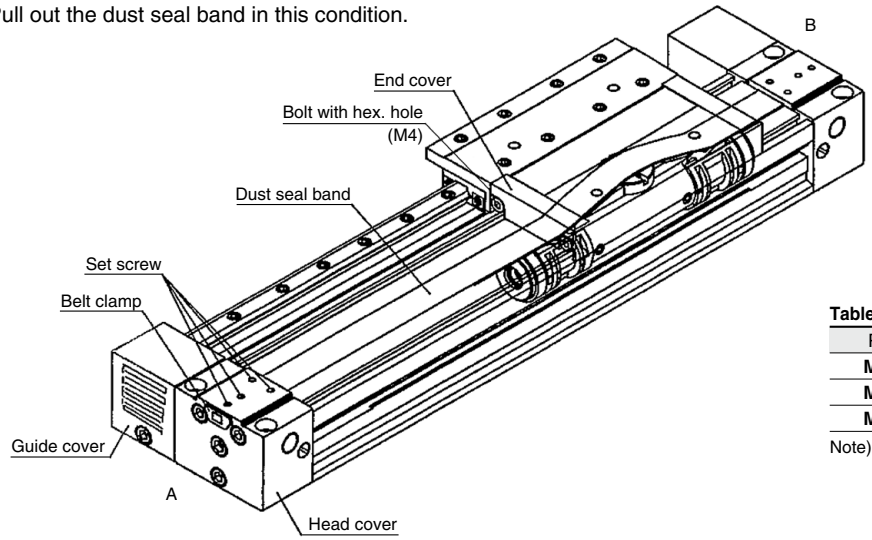

Table. 1 Dust seal band standard list

Part number	Standard length
MY10-16B-st	st + 110 $^{+2}_{0}$
MY16-16B-st	st + 160 $^{+2}_{0}$
MY20-16B-st	st + 200 $^{+2}_{0}$

Note) 2 types of dust seal bands are available and the part no. depends on treatment of set screw.(Over ø16)
Black zinc chromated → MY∗∗-16B-st
Nickel plating → MY∗∗-16BW-st

2. Assembly

a. After first performing the additional process shown in Fig. 2, be sure to apply grease to the entire replacement dust seal band in the manner shown in Fig. 1 (Note 1).
b. The dust seal band for replacement is pierced the slide table.
c. The end cover is fixed so that the clearance between the end cover assembly bottom part and the cylinder tube upper surface is about 1 mm. (Fig. 2)
The adequate tightening torque at this time is 0.7 N·m (7 kgf·cm).
The opposite end cover is fixed in the same way.
d. The dust seal bands of both sides inserted in the head cover to the position drawn with a pen (Fig. 3). Then, at the same time, insert the dust seal band in the groove of cylinder tube by pulling it to both sides. (Fig. 4)
e. If the dust seal band is installed properly without coming to the surface, tighten the 2 set screws at A side. Adequate tightening torque is 0.1 N·m (1 kgf·m).
f. Reciprocate the slide table 3 or 4 times to both stroke ends in order to remove the sag of the dust seal band.
Be sure to return the slide table to B side stroke end and tighten the set screw at B side after ensuring that the dust seal band is inserted in the head cover of about 10 mm.

Note 1) Apply grease evenly as the fig. 1. Use consistency No. 1 or No. 2 of the lithium soap grease.
Note 2) After inserting the dust seal band, pull it by the hands to A and B directions to make it a little tightened, and insert it to the cylinder tube ditch. (Fig. 4)
Note 3) Adequate tightening torque of the set screw is 0.1 N·m (1 kgf·cm).
Note 4) Ensure that the magic drawing of additional work to the dust seal band (Fig. 2) is hidden inside the head cover assembly.

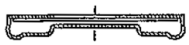

Grease application amount
(Shaded portion) ≈ 0.3 mm
Fig. 1

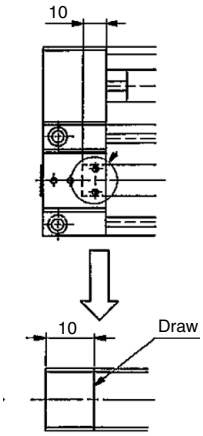

Fig. 2

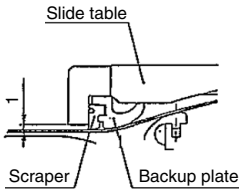

Fig. 3

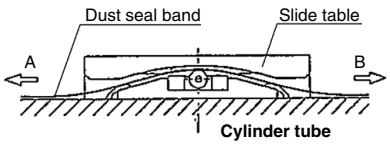

Fig. 4

1. Disassembly

a. Remove the 4 cap bolts for fixing the cylinder and remove the cylinder from the guide.
b. Loosen the 2 set screws on one side (3 screws for ø16) of the head cover, total 4 screws on both sides (6 screws for ø16). (Note 1)
c. Remove the 2 cap bolts for fixing the end cover to remove the end cover.
d. Remove the end cover on the other side in the same way.
e. Pull out the dust seal band in this state.

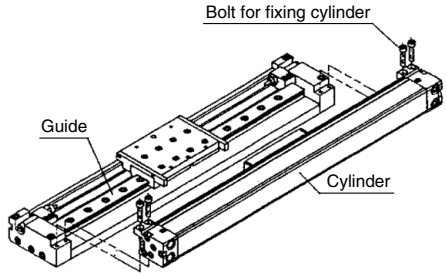

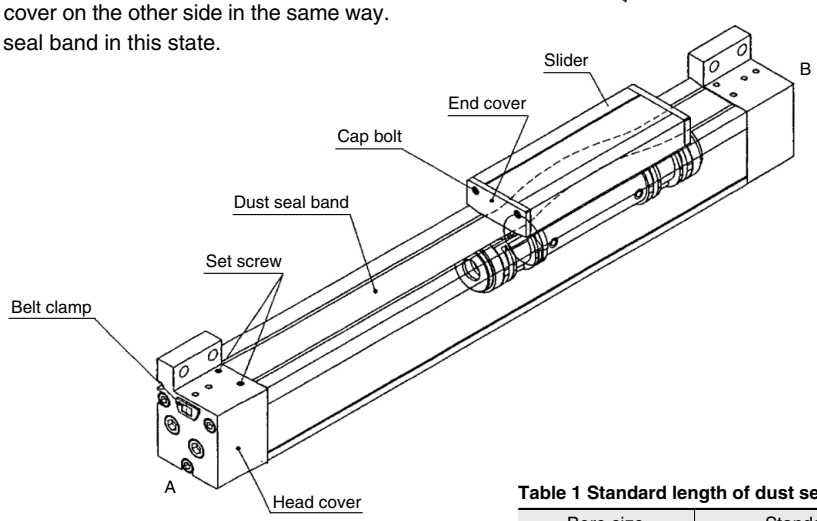

2. Assembly

a. Cut the dust seal band for replacement into the dimension shown in Table 1 and bend both ends at about 10° (Fig. 2) with L dimension in Table 2 from the position in Fig. 1.
b. Mount it on the cylinder facing the bent side downward. (Note 2)
c. Adjust the end cover to obtain about 1 mm clearance between the bottom face of the end cover and the top face of the cylinder tube and fix with care so that the scraper will not drop or twist. (Fig. 3)
d. Fix the end cover on the other side in the same way.
e. Adjust the dust seal band to obtain L dimensions in Table 2 (L dimension: the length of the dust seal band projected from the cylinder tube), and fix the set screws on side A. (Note 3)
f. Stretch the dust seal band toward side B and fix it with the set screws on side B.
g. Move the slider in full stroke for 2 to 3 times to check the dust seal band for fit.
h. Apply grease to the sliding part of the dust seal band (upper face of the cylinder tube) and mount the cylinder on the guide. (Note 4)

Note 1) For ø16, remove the belt clamp.
Note 2) The dust seal band is made of a thin material. Do not bend it at portions other than those designated.
Note 3) Tightening torque for set screws is 0.1 N·m (1 kgf·cm).
Note 4) For grease, use lithium soap base grease No. 1 or No. 2.

Table 1 Standard length of dust seal band

Bore size	Standard length
ø16	Stroke + 160^{+2}_{0}
ø25	Stroke + 176^{+2}_{0}
ø40	Stroke + 270^{+2}_{0}

Table 2 L dimension of dust seal band

Bore size	L dimension (mm)
ø16	20
ø25	8
ø40	10

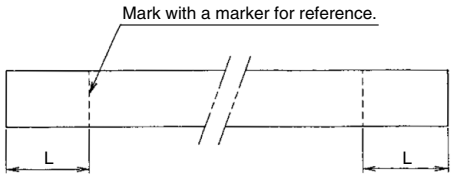

Fig. 1

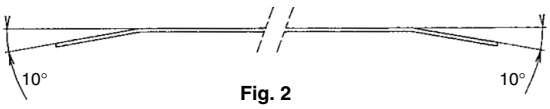

Fig. 2

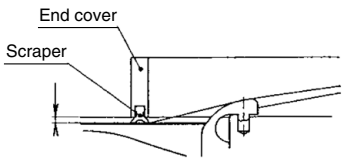

Fig. 3

1. Inspection/Maintenance

Regular grease applying (once a month) to the bearing sliding surface and the dust seal band is recommended for more improvement of life.

Refer to “Guide to Replacement of MY3□ Dust Seal Band” to replace the dust seal band.

2. Disassembly/Assembly

MY3A/B Series

Replacement Procedure of the Seal Belt

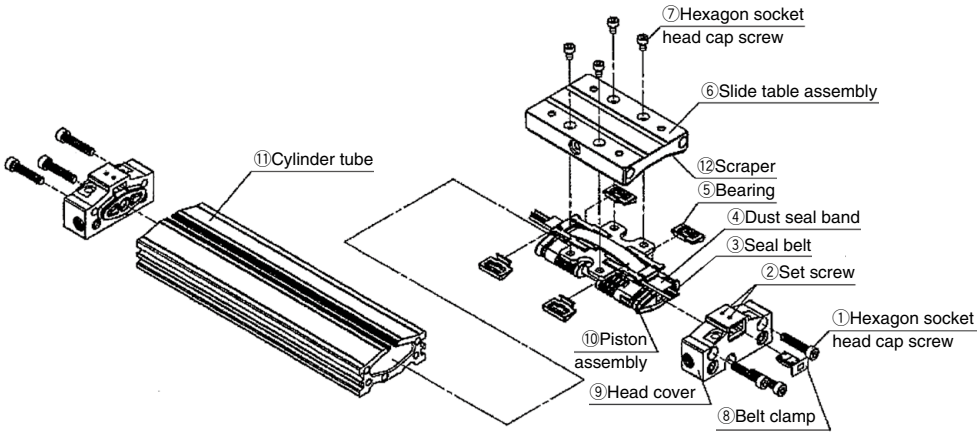

Fig. 1

1.Disassembly

a. Loosen 2 set screws ② on the top head cover ⑨.
b. Remove belt clamp ⑧.
c. Remove 4 retaining hexagon socket head cap screws ⑦ on the top of slide table assembly ⑥.
d. Remove slide table assembly ⑥. (At this time, please watch that the beanings ⑤ and the scraper ⑫ might fall. (Note 2)
e. In this condition, Pull out dust seal band ④.
f. Remove 4 bearings ⑤ in the right and left from piston assembly ⑩.
g. Remove 3 head cover retaining hexagon socket head cap screws ①.
h. Pull out head cover ⑨ from cylinder tube ⑪.
i. Pull out the other head cover ⑨ from cylinder tube ⑪ in the same method.
j. Pull out piston assembly ⑩ from cylinder tube ⑪.
k. Pull out seal belt ③ from cylinder tube ⑪.

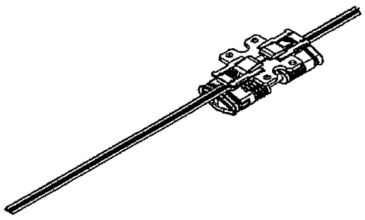

Fig. 2

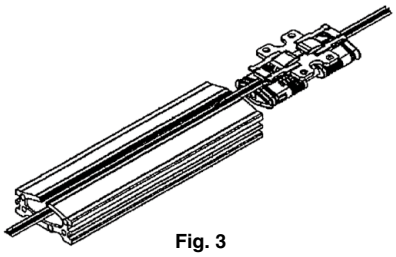

Fig. 3

2. Assembly
   a. Avoid flaws on the seal belt, as it may cause air leakage (Pay special attention to the edges indicated by arrows in Fig. 4).
   b. Check that the total length of the seal belt is of a recommended length and apply grease to the whole surface (Refer to Table 1).
   c. Put the seal belt through the piston assembly and assemble it to the cylinder tube as shown in Fig. 2 and 3.
   d. Keep the same extra length of seal belt on both left and right ends of the cylinder tube and slowly reciprocate the piston assembly once to fit the seal belt into the cylinder tube. Then, reciprocate the piston assembly a couple of times more and wipe the extra grease collected forward of the piston off. (When grease remains on the contact side of the piston and the head cover, it may cause the lurching by sticking.
   e. Insert the right and left head cover in the cylinder tube, and tighten the head cover retaining hexagon socket head cap screws.
   f. Put the dust seal band in piston assembly. (Note 1)
   g. Insert the bearing into the piston assembly. (Note 1)
   h. Assembly the slide table assembly to the piston assembly with the retaining hexagon socket head cap screws. (Note 1)
   i. Cut off the extra seal belt over the head cover ends with a cutter and assemble the belt clamp.
   j. Tighten the 2 set screws each on the top of both head covers. (Note 1)
   k. This is the end of replacement work.
   If air leakage is considerable after replacement, consult SMC.

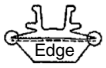

Fig. 4

Table 1. Seal belt part no.

	Bore size	Part no.	Recommended length
MY3A	ø16	MY3A16-16C-st	st + 206
	ø20	MY3A20-16C-st	st + 225
	ø25	MY3A25-16C-st	st + 246
	ø32	MY3A32-16C-st	st + 289
	ø40	MY3A40-16C-st	st + 336
	ø50	MY3A50-16C-st	st + 370
	ø63	MY3A63-16A-st	st + 416
MY3B MY3M Note 3)	ø16	MY3B16-16C-st	st + 218
	ø20	MY3B20-16C-st	st + 245
	ø25	MY3B25-16C-st	st + 274
	ø32	MY3B32-16C-st	st + 321
	ø40	MY3B40-16C-st	st + 372
	ø50	MY3B50-16C-st	st + 406
	ø63	MY3B63-16A-st	st + 452

Note 1) Refer to "Dust Seal Band Replacement Procedure" for dust seal band assembling (installation of the bearing and the slide table assembly).
Note 2) When parts fall check no adhesion of the foreign objects and assembly it.
Note 3) Only bore sizes ø16, ø25, ø40 and ø63 are available in MY3M.

Replacement Procedure of the Dust Seal Band

1. Disassembly
   a. Loosen the 2 set screws at one side, that is, 4 set screws both sides totally for 3 rotations.
   b. Remove the slide table by removing the 2 hexagon socket button bolts for fixing on the slide table.
   Pay attention not to let the bearing and the scraper come off when the slid table is removed.
   c. Pull out the dust seal band at this condition.
2. Assembly
   a. Cut the replacement dust seal band to the dimensions shown in Table 1.
   ∗The length of the dust seal band is defined as regulated, but check the length again before mounting for shipping.
   b. Pass the replacement dust seal band through the opening (at 2 places) of the belt separator, and mount on the cylinder body.
   c. Set the bearing in place.
   d. Mount the scraper into the groove on the slide table.

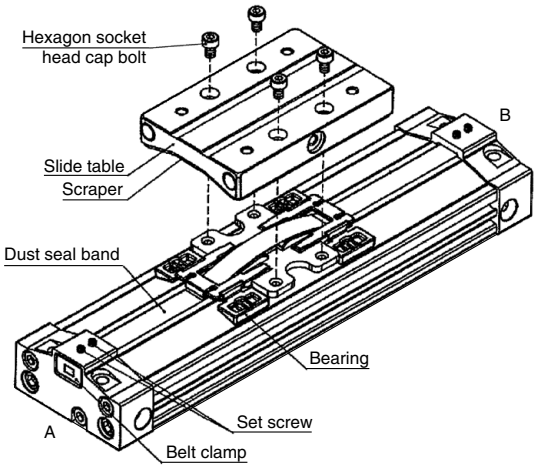

Table 1. Standard length dust seal band

Bore size	MY		MY	
	Part no.	Recommended length	Part no.	Recommended length
ø16	MY3A16-16B-st	st + 106 $^{0}_{-2}$	MY3B16-16B-st	st + 118 $^{0}_{-2}$
ø20	MY3A20-16B-st	st + 125 $^{0}_{-2}$	MY3B20-16B-st	st + 145 $^{0}_{-2}$
ø25	MY3A25-16B-st	st + 146 $^{0}_{-2}$	MY3B25-16B-st	st + 174 $^{0}_{-2}$
ø32	MY3A32-16B-st	st + 189 $^{0}_{-2}$	MY3B32-16B-st	st + 221 $^{0}_{-2}$
ø40	MY3A40-16B-st	st + 236 $^{0}_{-2}$	MY3B40-16B-st	st + 272 $^{0}_{-2}$
ø50	MY3A50-16B-st	st + 270 $^{0}_{-2}$	MY3B50-16B-st	st + 305 $^{0}_{-2}$
ø63	MY3A63-16B-st	st + 316 $^{0}_{-2}$	MY3B63-16B-st	st + 352 $^{0}_{-2}$

e. Set the slide table in place referring to the fixing bolt position, and fix it with the 4 hexagon socket head bolts.
f. Align the end surfaces and insert them to the head cover so that the protruded amount of the dust seal band from the cylinder tube will be L dimension shown in Table 2, and fix the set screw closer to the A side holding the belt clamp.
g. Pull the dust seal band to the B side until it has no protruded part, and fix the set screw close to the B side holding the belt clamp.
h. Tighten the set screw closer to the cylinder tube on the top of the head cover until all of the lifted part of the dust seal band near the cylinder tube ends at both of A and B sides are eliminated.
   In that case, adjust so that the dust seal band located near screws does not lift due to excessive tightening. Proper tightening torque is 0.1 N·m (1 kgf·cm).
i. Cycle the slide table at full stroke 2 to 3 times, and check there is no lifted part all over the dust seal band.
j. Apply grease to the whole sliding part (top of the cylinder tube) of the dust seal band.

Note 1) Handle the dust seal band with care because it is thing and easily bent.

Note 2) For grease, use lithium soap grease with consistency No. 1 or No. 2.

Table 2. Dust seal band L dimension (MY3A/B)

Bore size	L dimension (mm)
ø16	11.5
ø20	14
ø25	18
ø32	20.5
ø40	25
ø50	25
ø63	29

1. Disassembly

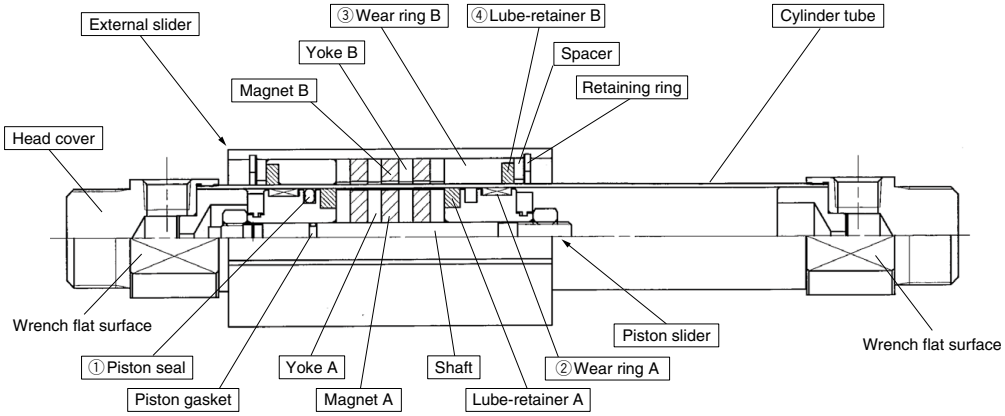

Fig. 1 Internal structure (Model: CY3B20-Z)

Steps	Precautions	Others
1. Removal of the head cover · Hold the wrench flats of one of the head covers with a vise, etc. · Remove the other head cover using a wrench or monkey wrench on its wrench flats.	· As the surface of the cylinder tube is a sliding surface, be sure to avoid scratching or denting it. · Do not grip the cylinder tube directly with a vise or pipe wrench. · Be aware that only 1 of the 2 head covers can be removed. · When reassembling the head cover, tighten it an additional 3 to 5 degrees from its position before removal.	· Adhesive is applied to the threads of the cylinder tube and head cover to prevent loosening. · When reassembling, remove the hardened adhesive, oil, etc., from the threads, reapply adhesive, and tighten the head cover. [Loctite No. 542 (Red)]
2. Removal of the slider · Take the external slider and the piston slider out from the cylinder tube separately.	· Use external force or air pressure to forcibly shift the positional relationship of the external slider and the piston slider inside the cylinder tube, which will disengage the magnetic coupling, and take them out separately. If the external slider and piston slider are removed while still magnetically coupled, the sliders will not be able to be removed from each other. (Refer to Fig. 2 on page 415-2 for the disengagement method.) **⚠Warning** · Be careful when handling as the magnets used in the sliders are extremely strong. · When using air pressure to shift the positional relationship of the external slider and the piston slider, do so with the head cover tightened. If the head cover is loose, it may come off when the piston slider collides with the head cover, resulting in the piston slider shooting out.	· When replacing the seal kit, do not disassemble down to the magnet and yoke. Mounting the magnet in the wrong direction (polarity) during reassembly may result in reduced magnet holding force.

2. Replacement

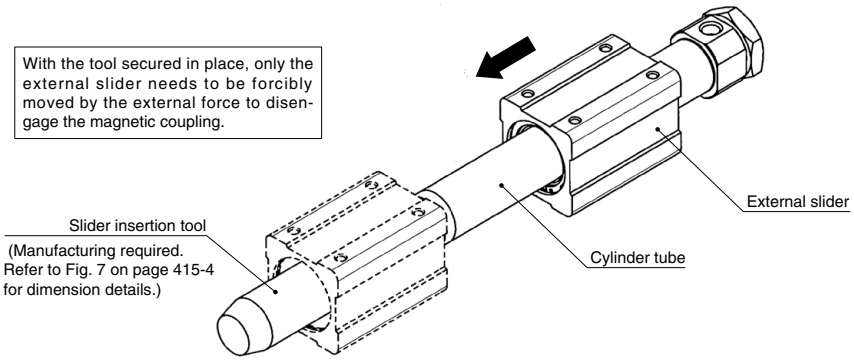

Fig. 2 External slider removal procedure (using external force)

Part name	Consumable parts to be replaced	Content
1. Piston slider 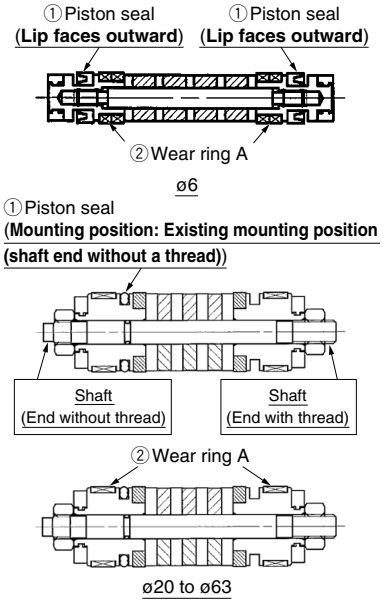 **Fig. 3 Piston seal mounting direction**	Can be ordered as part of the seal kit (Refer to page 415-5.) [Applicable size] ø6 to ø40 (Bore sizes ø50 and ø63 not supported) ∗ If maintenance is required for bore size ø50 or ø63, request a repair at an SMC factory. ①Piston seal Bore size / Qty. **ø6** / 2 **ø10** to **ø40** / 1 (**ø50, ø63**) / (1) ②Wear ring A Bore size / Qty. **ø6** / 4 **ø10** / 2 **ø15** / 4 **ø20** to **ø40** / 2 (**ø50, ø63**) / (6)	· When installing piston seal ①, apply grease from the grease pack included in the seal kit, or from the specified grease pack, to the seal groove. · For ø6 piston seals, there is a designated mounting direction. As shown in Fig. 3, install the seal with the lip facing outward. · There is no specified mounting direction for ø10 and ø15 piston seals. Mount the seal in the groove on only 1 (optional) of the 2 pistons. · There is a specified mounting direction for ø20 to ø63 piston seals. Be sure to mount the seal at the existing mounting position (the shaft end without a thread). If it is mounted in the groove on the opposite piston, it will not seal. · After installing the piston seal, be sure to check that the seal is not twisted. · For wear ring A ②, only ø10 cannot be replaced. Contact SMC if replacement is required. · When inserting the part back into the cylinder tube after replacement, apply extra grease to the piston seal and wear ring A of the piston slider.
2. External slider 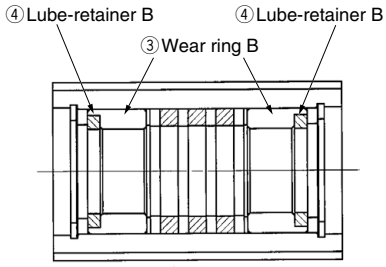 **Fig. 4 External slider replacement parts**	③Wear ring B Bore size / Qty. **ø6** to **ø40** / 2 (**ø50, ø63**) / (2) ④Wear ring B Bore size / Qty. **ø6** / None **ø10** to **ø40** / 2 (**ø50, ø63**) / (2)	· Remove one of the external slider retaining rings (retaining ring) with snap ring pliers. · Remove spacer, wear ring B, and Lube-retainer, and then replace them. · Allow the Lube-retainer to soak in the grease for approx. 2 hours before installing it. ∗ Conduct replacement on each side of the external slider, one side at a time. Do not remove the magnetic components (the magnet and yoke) from the body. Doing so may result in reduced cylinder performance. · When inserting the external slider back into the cylinder tube after replacing the parts, apply extra grease from the grease pack included in the seal kit, or from the specified grease pack, to the Lube-retainer and wear ring B of the external slider.

∗ Specified grease (Grease pack)

3. How to insert the external slider and piston slider into the cylinder tube (Caution required)

Procedures

(1) Apply grease to the inner surface of the cylinder tube.
(2) Place the piston slider on top of the external slider (For bore sizes other than ø6). For bore size ø6, the sliders have no insertion direction.
(3) If the piston slider will not couple at the center of the external slider as in Fig. 6, rotate the piston slider 180° so it is positioned as in Fig. 5. If incorrectly positioned sliders are inserted into the cylinder tube as is, they will not magnetically couple as required.
In addition, the stoke will not operate normally.
(4) Insert the slider insertion tool into the cylinder tube.
(5) Confirm that the sliders are in the same state as in Fig. 5, and insert the greased external slider into the cylinder tube.
(6) Remove the slider insertion tool from the cylinder tube.
(7) Insert the greased piston slider into the cylinder tube.
(8) Manually move the external slider back and forth multiple times to spread the grease within the cylinder tube.
(9) Move the external slider to the stroke end, and lightly wipe off the excess grease adhering to the end surface of the piston slider.
(10) After wiping off the grease adhering to the threads of the cylinder tube with alcohol, etc., apply adhesive (Loctite No. 542 (red)) to the cylinder tube or head cover threads, and then tighten the head cover.
For bore sizes ø6 and ø10, confirm that there are no scratches or other damage on the cylinder tube gasket before tightening. Adhesive is not required.
(11) Fit the external slider and piston slider into place inside the cylinder tube. (Refer to Fig. 9 on page 416-3 for the fitting procedure.)
(12) Confirm that the positional relationship of the external slider and piston slider is correct. (Refer to Fig. 8 on page 415-4.)

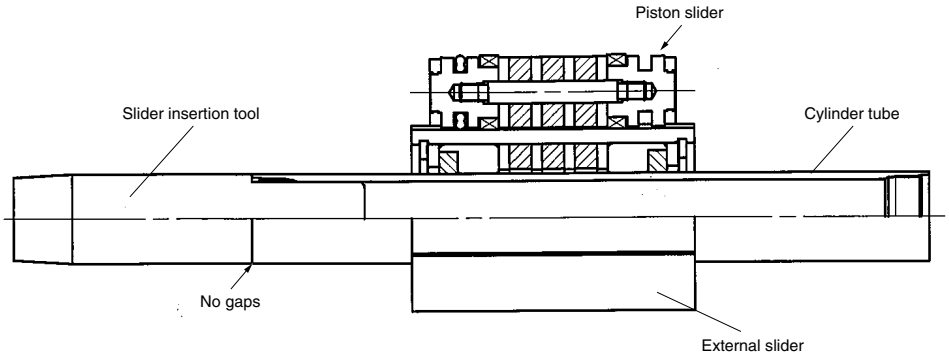

Fig. 5 Correct positioning (the centers of the sliders are aligned) (ø10)

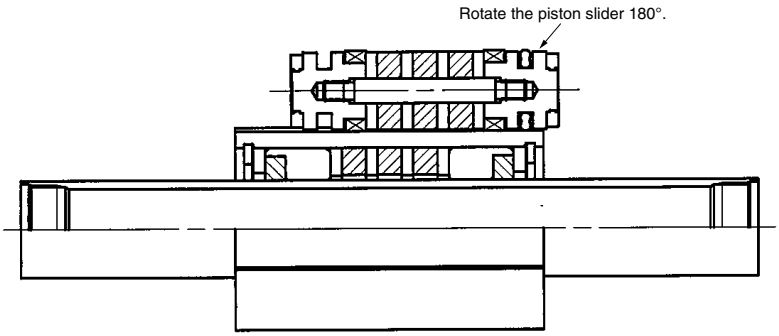

Fig. 6 Incorrect positioning (the centers of the sliders are not aligned) (ø10)

If the external slider is inserted directly into the cylinder tube without the use of the slider insertion tool, the Lube-retainer attached to the external slider may get caught on the cylinder tube entrance, resulting in damage. (Refer to Fig. 7 on page 416-3.)

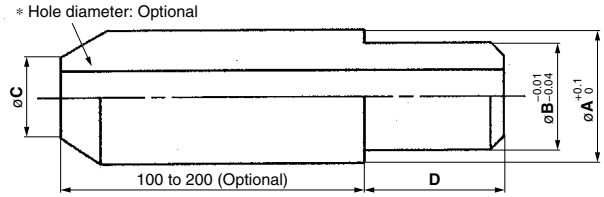

∗ For the release of air when inserting tubing

	ø6	ø10	ø15	ø20	ø25	ø32	ø40	ø50	ø63
A	7.6	12	16.6	21.6	26.4	33.6	41.6	52.4	65.4
B	6	10	15	20	25	32	40	50	63
C	4	8	13	18	23	30	36	46	56
D	20	20	30	30	40	50	60	60	60

Fig. 7 Slider insertion tool dimensions

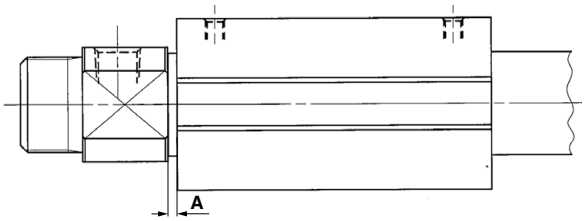

Bore size	**A** (mm)
ø6	4
ø10	1.5
ø15 to **ø32**	2
ø40	3
ø50, ø63	8

Fig. 8 External slider and head cover gap dimensions (Under normal conditions)

[Slider fitting procedure]

◎ How to push the external slider with external force (by hand, etc.)

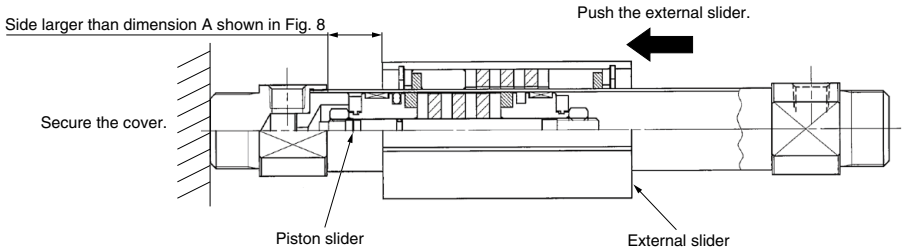

∗ The piston slider hits the cover, and the external slider cannot reach the stroke end.

◎ How to push the piston slider with air pressure (approx. 0.5 MPa) (Opposite side of the above figure)

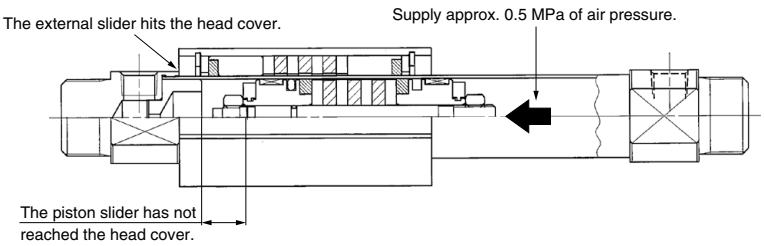

∗ The external slider hits the cover, and the piston slider cannot reach the stroke end.

Fig. 9 Slider fitting procedure

1. Disassembly

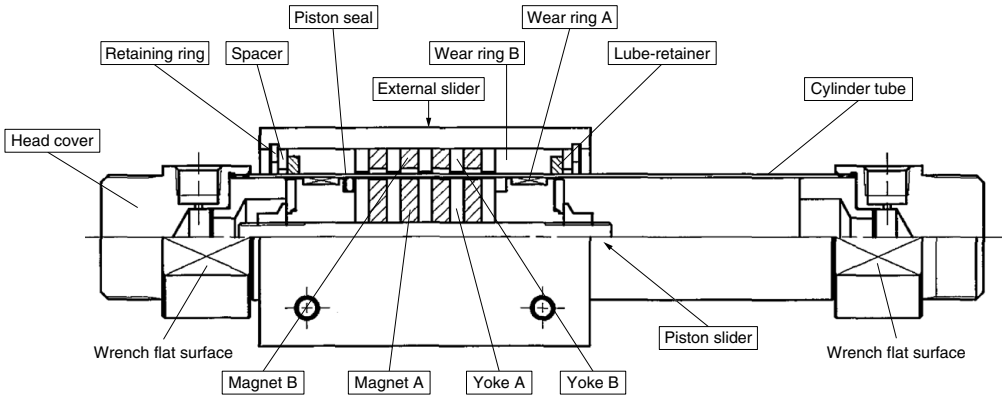

Fig. 1 Internal structure (Model: CY3B25)

Steps	Precautions	Others
1. Removal of the head cover · Hold the wrench flats of one of the head covers with a vise, etc. · Remove the other head cover using a wrench or monkey wrench on its wrench flats.	· As the surface of the cylinder tube is a sliding surface, be sure to avoid scratching or denting it. · Do not grip the cylinder tube directly with a vise or pipe wrench. · Be aware that only 1 of the 2 head covers can be removed. · When reassembling the head cover, tighten it an additional 3 to 5 degrees from its position before removal.	· Adhesive is applied to the threads of the cylinder tube and head cover to prevent loosening. · When reassembling, remove the hardened adhesive, oil, etc., from the threads, reapply adhesive, and tighten the head cover. [Loctite No. 542 (Red)]
2. Removal of the slider · Take the external slider and the piston slider out from the cylinder tube separately.	· Use external force or air pressure to forcibly shift the positional relationship of the external slider and the piston slider inside the cylinder tube, which will disengage the magnetic coupling, and take them out separately. If the external slider and piston slider are removed while still magnetically coupled, the sliders will not be able to be removed from each other. (Refer to Fig. 2 on page 416-1 for the disengagement method.) **⚠Warning** · Be careful when handling as the magnets used in the sliders are extremely strong. · When using air pressure to shift the positional relationship of the external slider and the piston slider, do so with the head cover tightened. If the head cover is loose, it may come off when the piston slider collides with the head cover, resulting in the piston slider shooting out.	· When replacing the seal kit, do not disassemble down to the magnet and yoke. Mounting the magnet in the wrong direction (polarity) during reassembly may result in reduced magnet holding force.

2. Replacement

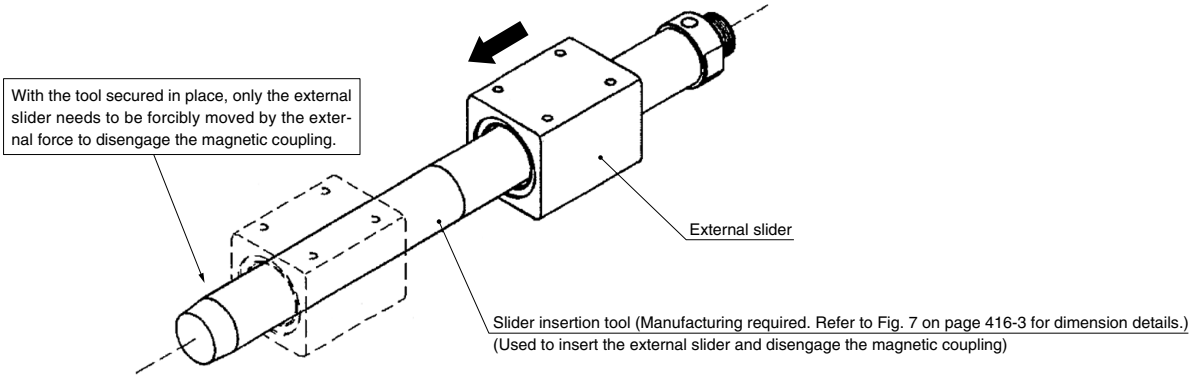

Fig. 2 External slider removal procedure (using external force)

Part name	Consumable parts to be replaced	Content
1. Piston slider 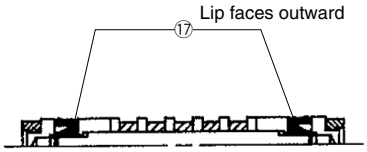 ø6 piston seal mounting direction 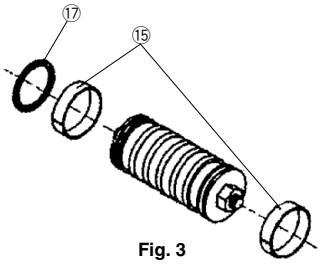 **Fig. 3**	Can be ordered as part of the seal kit (Refer to the **Web Catalog**.) Piston seal ⑰ Bore size / Qty. **ø6** / 2 **ø10 to ø63** / 1 Wear ring A ⑮ Bore size / Qty. **ø6** / – **ø10 to ø40** / 2 **ø50, ø63** / 6	· When installing piston seal ⑰, apply grease from the grease pack included in the seal kit, or from the specified grease pack, to the seal groove. · For ø6 piston seals, there is a designated mounting direction. As shown in Fig. 3, install the seal with the lip facing outward. · For piston seals other than ø6, install 1 in any one of the installation grooves. There is no designated mounting direction. · After installing the piston seal, be sure to check that the seal is not twisted. · For wear ring A ⑮, only ø10 cannot be replaced. Contact SMC if replacement is required. · When inserting the part back into the cylinder tube after replacement, apply extra grease to the piston seal and wear ring A of the piston slider.
2. External slider 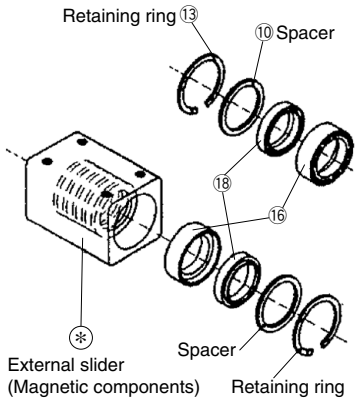 **Fig. 4**	Lube-retainer ⑱ Bore size / Qty. **ø6** / – **ø10 to ø63** / 2 Wear ring B ⑯ Bore size / Qty. **ø6 to ø63** / 2	· Remove one of the external slider retaining rings (retaining ring ⑭) with snap ring pliers. · Remove spacer ⑩, wear ring B ⑯, and Lube-retainer ⑱, and then replace them. · Allow the Lube-retainer to soak in the grease for approx. 2 hours before installing it. ∗ Conduct replacement on each side of the external slider, one side at a time. Do not remove the magnetic components (the magnet and yoke) from the body. Doing so may result in reduced cylinder performance. · When inserting the external slider back into the cylinder tube after replacing the parts, apply extra grease from the grease pack included in the seal kit, or from the specified grease pack, to the Lube-retainer and wear ring B of the external slider.

∗ Specified grease (Grease pack)
ø6, ø10: GR-F-005 (For external slider sliding) and GR-S-010 (For inside the cylinder tube)
ø15 to ø63: GR-S-010 (Same for internal and external parts)

3. How to insert the external slider and piston slider into the cylinder tube (Caution required)

Procedures

(1) Apply grease to the inner surface of the cylinder tube.
(2) Place the piston slider on top of the external slider (for bore sizes ø6 and ø10). For bore sizes other than ø6 and ø10, the sliders have no insertion direction.
(3) If the piston slider will not couple at the center of the external slider as in Fig. 6, rotate the piston slider 180° so it is positioned as in Fig. 5. If incorrectly positioned sliders are inserted into the cylinder tube as is, they will not magnetically couple as required.
In addition, the stoke will not operate normally.
(4) Insert the slider insertion tool into the cylinder tube.
(5) Confirm that the sliders are in the same state as in Fig. 5, and insert the greased external slider into the cylinder tube.
(6) Remove the slider insertion tool from the cylinder tube.
(7) Insert the greased piston slider into the cylinder tube.
(8) Manually move the external slider back and forth multiple times to spread the grease within the cylinder tube.
(9) Move the external slider to the stroke end, and lightly wipe off the excess grease adhering to the end surface of the piston slider.
(10) After wiping off the grease adhering to the threads of the cylinder tube with alcohol, etc., apply adhesive (Loctite No. 542 (red)) to the cylinder tube or head cover threads, and then tighten the head cover.
For bore sizes ø6 and ø10, confirm that there are no scratches or other damage on the cylinder tube gasket before tightening. Adhesive is not required.
(11) Fit the external slider and piston slider into place inside the cylinder tube. (Refer to Fig. 9 on page 416-3 for the fitting procedure.)
(12) Confirm that the positional relationship of the external slider and piston slider is correct. (Refer to Fig. 8 on page 416-3.)

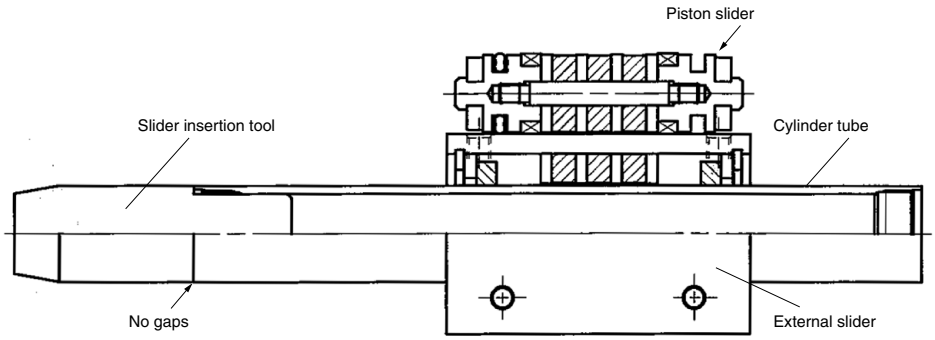

Fig. 5 Correct positioning (the centers of the sliders are aligned) (ø10)

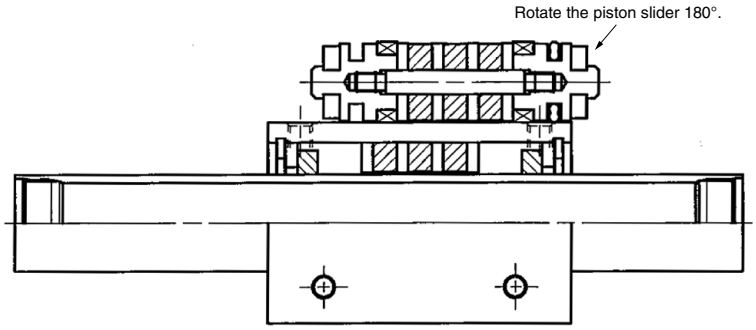

Fig. 6 Incorrect positioning (the centers of the sliders are not aligned) (ø10)

If the external slider is inserted directly into the cylinder tube without the use of the slider insertion tool, the Lube-retainer attached to the external slider may get caught on the cylinder tube entrance, resulting in damage. (Refer to Fig. 7 on page 416-3.)

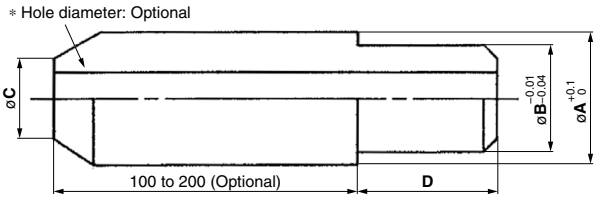

∗ For the release of air when inserting tubing

	ø6	ø10	ø15	ø20	ø25	ø32	ø40	ø50	ø63
A	7.6	12	16.6	21.6	26.4	33.6	41.6	52.4	65.4
B	6	10	15	20	25	32	40	50	63
C	4	8	13	18	23	30	36	46	56
D	20	20	30	30	40	50	60	60	60

Fig. 7 Slider insertion tool dimensions

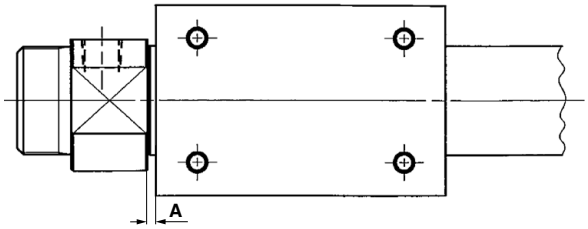

Bore size	**A**(mm)
ø6	4
ø10	1.5
ø15 to ø32	2
ø40	3
ø50, ø63	8

Fig. 8 External slider and head cover gap dimensions (Under normal conditions)

[Slider fitting procedure]

◎ How to push the external slider with external force (by hand, etc.)

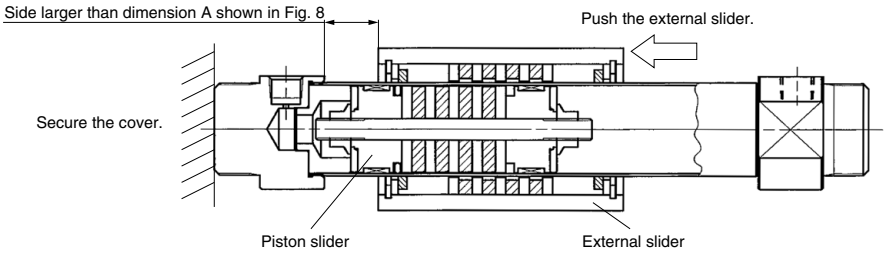

∗ The piston slider hits the cover, and the external slider cannot reach the stroke end.

◎ How to push the piston slider with air pressure (approx. 0.5 MPa) (Opposite side of the above figure)

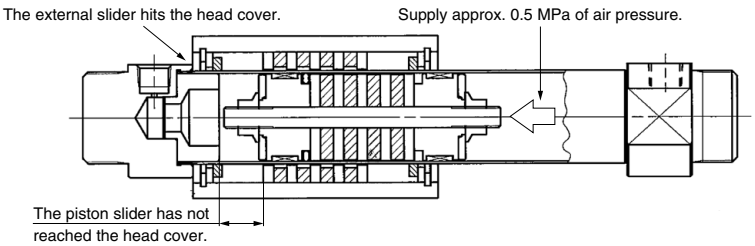

∗ The external slider hits the cover, and the piston slider cannot reach the stroke end.

Fig. 9 Slider fitting procedure

1 Disassembly

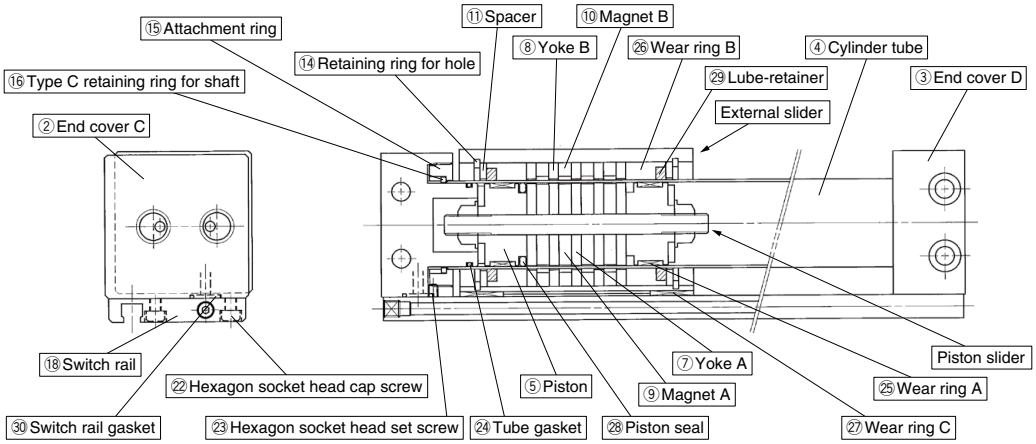

Fig. 1 Internal structure (Model: CY3RG25)

Steps	Precautions	Others
1. Removal of the ⑱ switch rail · Remove the ㉒ hexagon socket head cap screw with a hexagon wrench, and then remove the ⑱ switch rail.		· Adhesive is applied on the hexagon socket head cap screw. Be sure to reapply adhesive during reassembly. [Loctite No. 263]
2. Removal of the ② ③ end cover · Use a hexagon wrench to loosen the ㉓ hexagon socket head set screw for securing the ⑮ attachment ring on the ⑱ switch rail mounting surface of the ② ③ end covers. · Remove the ⑮ attachment ring using the specific tool (Fig. 2). It may also be possible to remove it with snap ring pliers with bent tips. · Pull out the ② ③ end covers from the ④ cylinder tube. · Remove the ⑯ type C retaining ring for the shaft from the ④ cylinder tube.	· Be sure not to forget to loosen the hexagon socket head set screw before removing the attachment ring. · The attachment ring can be removed by applying torque in the counterclockwise direction. · As the tip of the type C retaining ring for the shaft is sharp, be careful to avoid injury while working. · As the surface of the cylinder tube is a sliding surface, be sure to avoid scratching or denting it. **Specific tool** Part no. / Applicable tube I.D. (mm) **CYRZ-V** / 6, 10, 15, 20 **CYRZ-W** / 25, 32, 40 **CYRZ-X** / 50 **CYRZ-Y** / 63	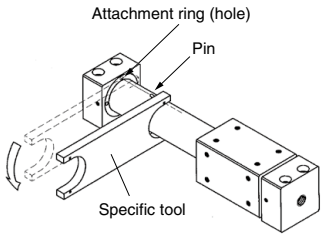 **Fig. 2**
3. Removal of the slider · Take the external slider and the piston slider out from the ④ cylinder tube separately.	· Use external force or air pressure to forcibly shift the positional relationship of the external slider and the piston slider inside the cylinder tube, which will disengage the magnetic coupling, and take them out separately. If the external slider and piston slider are removed while still magnetically coupled, the sliders will not be able to be removed from each other. (Refer to Fig. 3 on page 416-5 for the disengagement method.) **⚠ Warning** · Be careful when handling as the magnets used in the sliders are extremely strong. · When using air pressure to shift the positional relationship of the external slider and the piston slider, do so with the end cover tightened. If the end cover is loose, it may come off when the piston slider collides with the end cover, resulting in the piston slider shooting out.	· When replacing the seal kit, do not disassemble down to the magnet and yoke. Mounting the magnet in the wrong direction (polarity) during reassembly may result in reduced magnet holding force.

2 Replacement

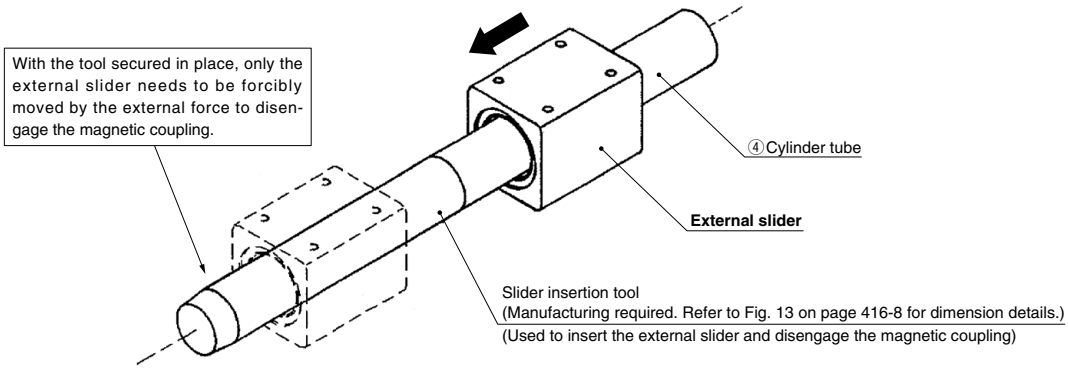

Fig. 3 External slider removal procedure (using external force)

Part name	Consumable parts to be replaced	Content
1. Piston slider 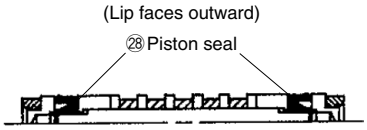 ø6 piston seal mounting direction 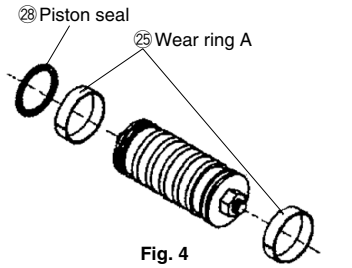 **Fig. 4**	Can be ordered as part of the seal kit Piston seal Bore size / Qty. **ø6** / 2 **ø10 to ø63** / 1 Wear ring A Bore size / Qty. **ø6** / – **ø10 to ø40** / 2 **ø50, ø63** / 6	· When installing piston seal, apply grease from the grease pack included in the seal kit, or from the specified grease pack, to the seal groove. · For ø6 piston seals, there is a designated mounting direction. As shown in Fig. 4, install the seal with the lip facing outward. · For piston seals other than ø6, install 1 in any one of the installation grooves. There is no designated mounting direction. · After installing the piston seal, be sure to check that the seal is not twisted. · For wear ring A, only ø10 cannot be replaced. Contact SMC if replacement is required. · When inserting the part back into the cylinder tube after replacement, apply extra grease to the piston seal and wear ring A of the piston slider.
2. External slider-1 (Internal parts replacement) 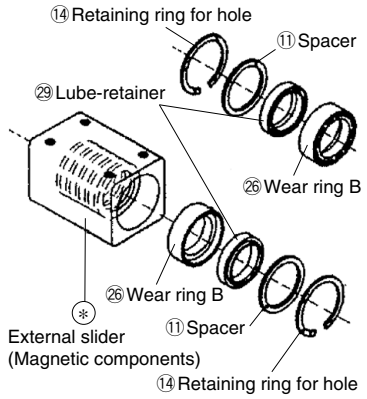 **Fig. 5**	Lube-retainer Bore size / Qty. **ø6** / – **ø10 to ø63** / 2 Wear ring B Bore size / Qty. **ø6 to ø63** / 2	· Remove one of the external slider retaining rings (retaining ring for hole) with snap ring pliers. · Remove spacer, wear ring B, and Lube-retainer, and then replace them. · Allow the Lube-retainer to soak in the grease for approx. 2 hours before installing it. ∗ Conduct replacement on each side of the external slider, one side at a time. Do not remove the magnetic components (the magnet and yoke) from the body. Doing so may result in reduced cylinder performance. · When inserting the external slider back into the cylinder tube after replacing the parts, apply extra grease from the grease pack included in the seal kit, or from the specified grease pack, to the Lube-retainer and wear ring B of the external slider.

∗ Specified grease (Grease pack)
ø6, ø10: GR-F-005 (For external slider sliding) and GR-S-010 (For inside the cylinder tube)
ø15 to ø63: GR-S-010 (Same for internal and external parts)

Part name	Consumable parts to be replaced	Content
3. External slider-2 (㉗ wear ring C replacement) 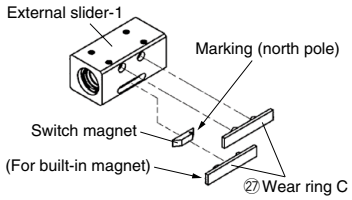 **Fig. 6 ø6, ø10** 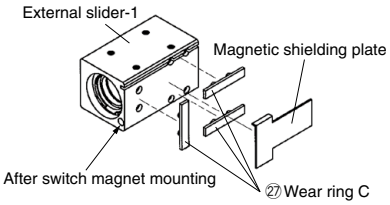 **Fig. 7 ø15** 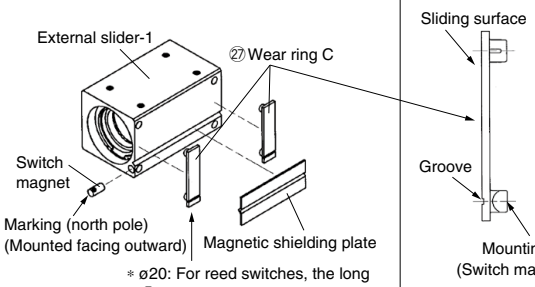 ∗ ø20: For reed switches, the long ㉗ wear ring C is mounted. **Fig. 8 ø20, ø25** 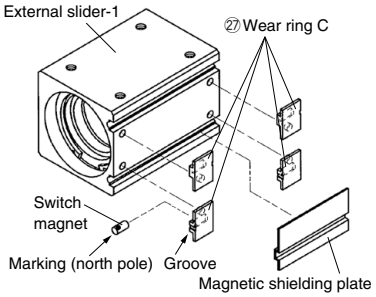 **Fig. 9 ø32 to ø63**	Wear ring C Bore size / Qty. **ø6, ø10** / 2 **ø15** / 3 **ø20, ø25** / 2 **ø32 to ø63** / 4 ∗ For bore size ø20, wear ring C for both solid state and reed switches are included in the seal kit. Use the appropriate wear ring C for the type of switch. (Seal kit: 2 pcs. for solid state switches, 1 pc. for reed switches)	**ø6, ø10** · Replace wear ring C with the new wear ring. The wear ring can be easily removed by inserting a flat head screwdriver, etc., into the mounting part. · There is a switch magnet mounted on only 1 (of the 2) wear ring C, and it is to be mounted on the groove of the external slider. · When replacing wear ring C, insert the side of the switch magnet with the marking in the direction shown in Fig. 6. Note that if the mounting direction is reversed, the switch will malfunction. · Wear ring C can be mounted by simply pushing it into the hole/groove. **ø15** · Replace wear ring C with the new wear ring. · Wear ring C can be mounted by simply pushing it into the hole. **ø20, ø25** · Replace wear ring C with the new wear ring. · Mount with the groove side of the wear ring C sliding surface facing the switch magnet side of the external slider. · For bore size ø20, the type of wear ring C to be mounted varies depending on the type of switch (reed/solid state). <For solid state switch> For the left and right wear ring C, 2 identical pieces which are shorter in length are used. <For reed switch> The wear ring C on the switch magnet side is longer in length. The other wear ring C is the same (shorter) as the one for solid state switches. · When replacing wear ring C, if the switch magnet protrudes from the external slider, insert it into the mounting hole with the side of the switch magnet with the marking facing outward as shown in Fig. 8. · Mount wear ring C after mounting the switch magnet. **ø32 to ø63** · Replace wear ring C with the new wear ring. · As shown in Fig. 9, 1 (of the 4) wear ring C has a switch magnet mounted on it (the other 3 do not). Push the magnet into the groove of wear ring C, with the groove side of the wear ring C end face and the side of the magnet with the marking facing the same direction.
4. ②③ End cover 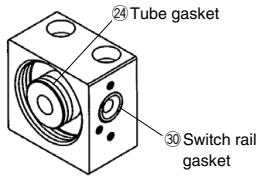 **Fig. 10**	Tube gasket Bore size / Qty. **ø6 to ø63** / 2 Switch rail gasket (Centralized piping only) Bore size / Qty. **ø10** / 1 **ø15 to ø63** / 2	· Replace the greased tube gasket and switch rail gasket.

3 How to insert the external slider and piston slider into the cylinder tube (Caution required)

Procedures

(1) Apply grease to the inner surface of the cylinder tube.
(2) Place the piston slider on top of the external slider (for bore sizes ø6 and ø10). For bore sizes other than ø6 and ø10, the sliders have no insertion direction.
(3) If the piston slider will not couple at the center of the external slider as in Fig. 12, rotate the piston slider 180° so it is positioned as in Fig. 11. If incorrectly positioned sliders are inserted into the cylinder tube as is, they will not magnetically couple as required.
In addition, the stoke will not operate normally.
(4) Insert the slider insertion tool into the cylinder tube.
(5) Confirm that the sliders are in the same state as in Fig. 11, and insert the greased external slider into the cylinder tube.
(6) Remove the slider insertion tool from the cylinder tube.
(7) Insert the greased piston slider into the cylinder tube.
(8) Manually move the external slider back and forth multiple times to spread the grease within the cylinder tube.
(9) Move the external slider to the stroke end, and lightly wipe off the excess grease adhering to the end surface of the piston slider.
(10) Follow the disassembly procedure in the reverse order to reassemble the end cover, etc.
(11) Fit the external slider and piston slider into place inside the cylinder tube. (Refer to Fig. 15 on page 416-8 for the fitting procedure.)
(12) Confirm that the positional relationship of the external slider and piston slider is correct. (Refer to Fig. 14 on page 416-8.)
(13) Place the cylinder from step (12) on a flat surface, press the upper part of both end covers, and rotate them to remove the backlash between the end covers.
(14) Mount the switch rail.

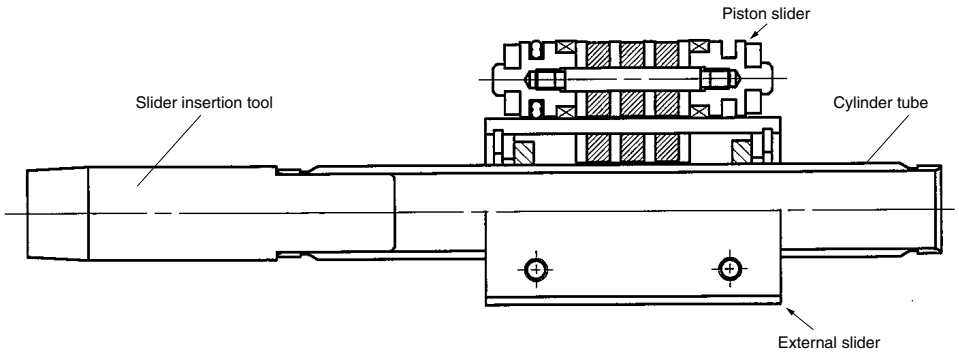

Fig. 11 Correct positioning (the centers of the sliders are aligned) (ø10)

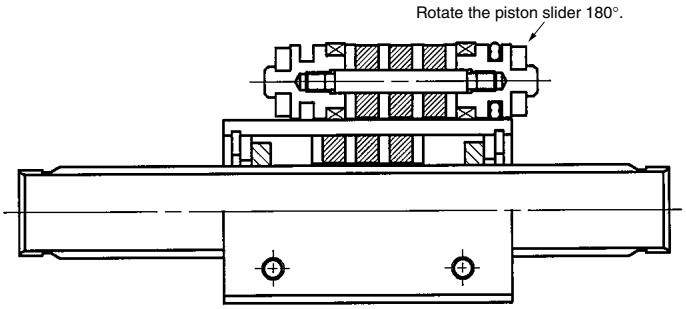

Fig. 12 Incorrect positioning (the centers of the sliders are not aligned) (ø10)

If the external slider is inserted directly into the cylinder tube without the use of the slider insertion tool, the Lube-retainer attached to the external slider may get caught on the cylinder tube entrance, resulting in damage. (Refer to Fig. 13 on page 416-8.)

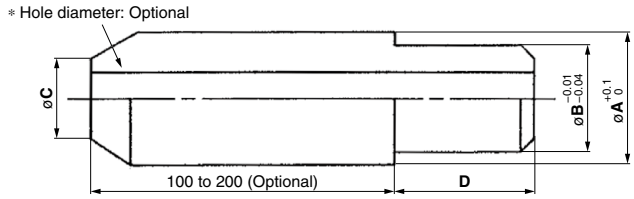

∗ For the release of air when inserting tubing

	ø6	ø10	ø15	ø20	ø25	ø32	ø40	ø50	ø63
A	7.6	12	16.6	21.6	26.4	33.6	41.6	52.4	65.4
B	6	10	15	20	25	32	40	50	63
C	4	8	13	18	23	30	36	46	56
D	20	20	30	30	40	50	60	60	60

Fig. 13 Slider insertion tool dimensions

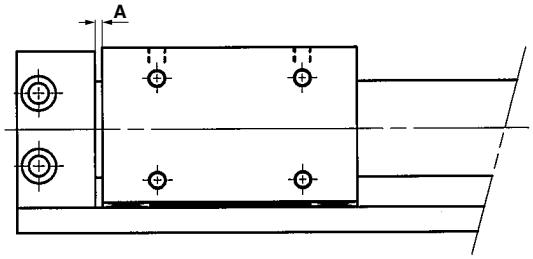

Bore size	**A** (mm)
ø6 to ø15	1.5
ø20, ø25	2
ø32 to ø63	3

∗ Both ends have the same dimensions.

Fig. 14 External slider and head cover gap dimensions (Under normal conditions)

[Slider fitting procedure]

◎ How to push the external slider with external force (by hand, etc.)

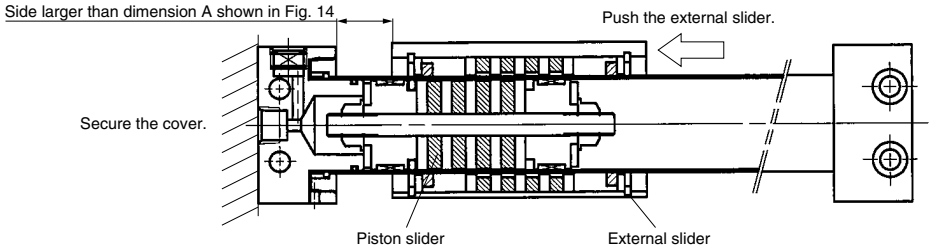

∗ The piston slider hits the cover, and the external slider cannot reach the stroke end.

◎ How to push the piston slider with air pressure (approx. 0.5 MPa) (Opposite side of the above figure)

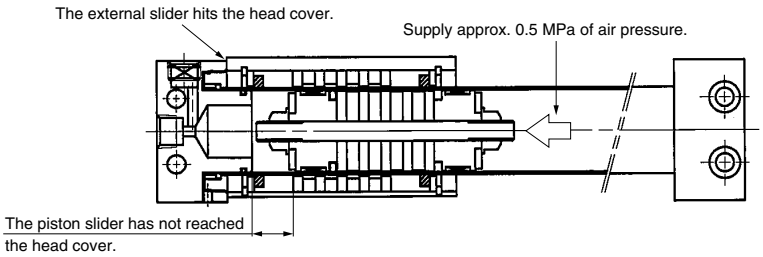

∗ The external slider hits the cover, and the piston slider cannot reach the stroke end.

Fig. 15 Slider fitting procedure

1. Disassembly and Maintenance

1-1. If the cylinder needs to be disassembled for replacement of piston packing, soft wiper, and wear ring, specific tool is required. The specific tool can be ordered by part no. shown on Table.

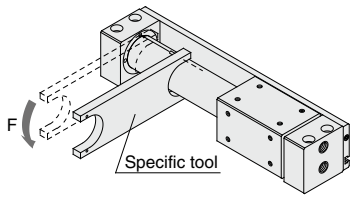

Part no. of specific tool

Part on.	**Applicable cylinder tube I.D.** (mm)
CYRZ-V	6, 10, 15, 20
CYRZ-W	25, 32, 40
CYRZ-X	50
CYRZ-Y	63

1-2. As for sine rodless cylinders, the cushion ring and seal are assembled to provide the optimum cushioning effect.
Therefore, they should be returned to the factory for maintenance.
If you disassemble them by necessity, please note the following points.

a. If the cylinder body or piston is removed from the cylinder tube, displace the positions of the external slider and the piston forcedly to eliminate holding force and take out them individually. If they are removed together with holding force left, they become unable to separate from each other by internal and external magnet force.
b. Loosen the hexagon socket head female screw on side of the end cover with a hexagon wrench, take off the attachment ring from the end cover from the specific tool and then remove the end cover from the cylinder tube. After that, remove the basic internal retaining ring mounted on the external face of the cylinder tube with a snap ring pliers. The used magnet has strong suction force and should be handled with care if the external slider and piston slider are removed from the cylinder tube.
c. Never disassembly the parts which compose the magnet (external slider and piston slider).
The disassembly of them may deprive holding force from the magnet and cause operating failure.
d. For handling of the external slider and the piston slider, watch on your arm should be put off not to get influence from strong magnetic field.
e. Handle the external slider and piston slider with care to protect the magnet from drop on the floor and collision to the metal.
f. Apply grease periodically on the external face of the cylinder tube and the sliding parts of the switch rail.
g. Since the cushion ring is precisely attached to the head cover, be careful not to take it off nor deform/dent it.

1. Disassembly

No.	Process	Steps			Note
1	Accessory removal	1) Remove the switch rail (㉚). (Picture 2) Use a Phillips head screwdriver to remove the cross-recessed round head screws (㊱) from both ends of the switch rail. 2) Remove the shock absorber (㊸), bumper bolt (㉕), and adjustment bolt (㊶). (Pictures 3 and 4) Remove fixing nuts (㉝) and (㉞) with a monkey wrench.	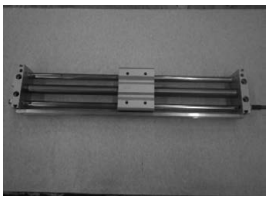 Picture 1: Cylinder appearance 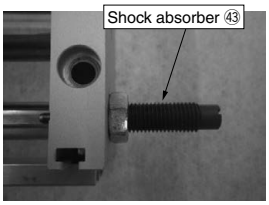 Picture 3: Shock absorber	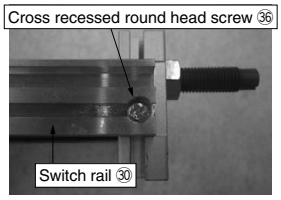 Picture 2: Switch rail 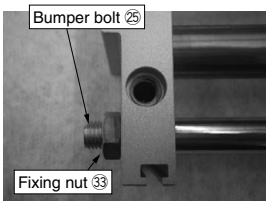 Picture 4: Bumper bolt	Cross recessed round head screw ø6 to ø40: M3 Shock absorber and bumper bolt nut size ø6: M6 ø10/ø15: M8 ø20: M10 ø25: M14 ø32/ø40: M20 Adjustment bolt nut size ø6/ø10/ø15: M4 ø20/ø25: M6 ø32/ø40: M8
2	Plate A removal (For the bilateral piping type) Plate C removal (For the centralized piping type)	1) Remove the hexagon socket head set screws (㉛) from the counterbore surfaces of plate A (㉒) and plate C (23a). (Picture 5) Use a hexagon wrench to remove them. 2) Remove the hexagon socket head cap screws (㉜) from the outside end surfaces of plate A and plate C. (Picture 6) Use a hexagon wrench to remove them. 3) Remove plate A and plate C from the guide shaft. (Picture 7)	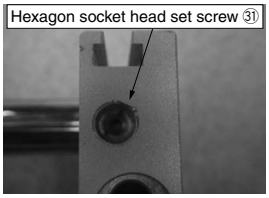 Picture 5: Hexagon socket head set screw Picture 7: Plate A and plate C removal	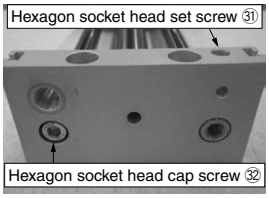 Picture 6: Hexagon socket head cap screw	Hexagon socket head set screw ø6: M3 ø10/ø15: M4 ø20/ø25: M5 ø32: M6, ø40: M8 Hexagon socket head cap screw ø6: M4 ø10/ø15: M5 ø20/ø25: M6 ø32: M8 ø40: M10 ∗ Plate A will be difficult to remove if it is tilted to the side, so be sure to hold it straight during removal. ∗ If plate A is difficult to remove, it can be removed while tapping it lightly with a plastic hammer, etc. However, be sure to do so in a manner that does not damage it.
3	Cylinder body removal (External slider) (Piston slider) (Cylinder tube)	1) Remove the cylinder tube (㉗) from plate B (23a) with the external slider and piston slider in a magnetically coupled state. (Pictures 8 and 9)	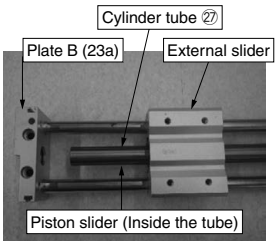 Picture 8: Cylinder body removal 1	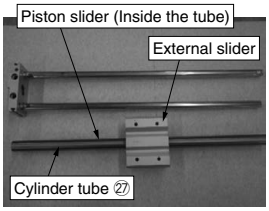 Picture 9: Cylinder body removal 2	∗ Be aware that at this time, if the external slider is pulled out from the cylinder tube as is, the piston slider will come out with it. Be sure to pull it out while holding the cylinder tube.

∗ The numbers after the part names indicate the part numbers as shown in the "Construction" section of the catalog.

No.	Process	Steps	Note
4	External slider and piston slider removal	1) When removing the external slider and piston slider from the cylinder tube, use the slider insertion tool (Picture 10) (Manufacturing required. Refer to Fig. 2 on page 418-3 for details.) and remove them separately after disengaging the magnetic coupling. 2) Mount the tool to the cylinder tube. (Picture 11) 3) With the tool facing downward, apply a downward force on the external slider to disengage the magnetic coupling. (Picture 12) Then, remove the external slider and the piston slider separately. (Picture 13) Picture 10: Slider insertion tool 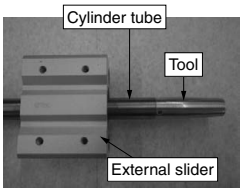 Picture 11: Slider insertion tool mounting 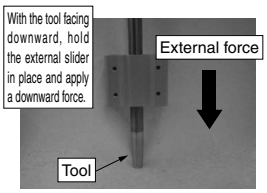 Picture 12: External slider removal procedure 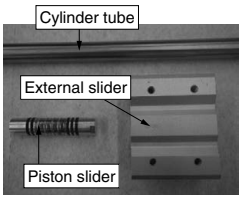 Picture 13: Removal of internal slider and external slider complete	· If the external slider and piston slider are removed while still magnetically coupled, the sliders will not be able to be removed from each other. **⚠Warning** · Be careful when handling as the magnets used in the sliders are extremely strong. · Try to refrain from using air pressure to forcibly shift the positional relationship of the external slider and the piston slider whenever possible. This method sometimes results in damage to the parts when the metal end of the piston slider hits the metal plate surface directly. (For the type without a rubber bumper)

2. Replacement procedures

No.	Process	Steps	Note
5	Replacement of seal	[Piston slider seal replacement] Replace the piston seal (④), wear ring A (⑤), and Lube-retainer A (⑥), all of which are included in the seal kit. (Picture 14) Piston seal ④ Bore size / Qty. ø6 / 2 ø10 to ø63 / 1 Wear ring A ⑤ Bore size / Qty. ø6 / – ø10 to ø40 / 2 Lube-retainer A ⑥ Bore size / Qty. ø6, ø10 / – ø15 to ø40 / 2 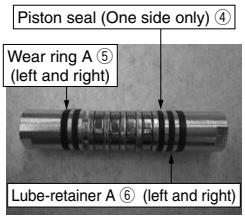 Picture 14: Piston slider (ø15) [External slider inner seal replacement] 2) Remove the external slider retaining ring (⑭) on one side. (Picture 15) 3) Remove the slider spacer (⑫) (including the slider gasket (⑬)). (Picture 15) 4) Remove the external slider tube assembly (external slider tube (⑯), spacer (㉑), wear ring B (⑲), Lube-retainer B (⑳), magnet B (⑰), and external slider side yoke (⑱)). (Picture 16) 5) Replace the seals. (Pictures 17 and 18) Slider gasket ⑬ Bore size / Qty. ø6 to ø40 / 2 Wear ring B ⑲ Bore size / Qty. ø6 to ø40 / 2 Lube-retainer B ⑳ Bore size / Qty. ø6 / – ø10 to ø40 / 2 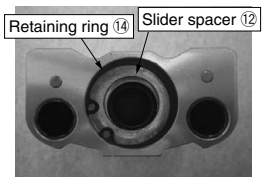 Picture 15: External slider 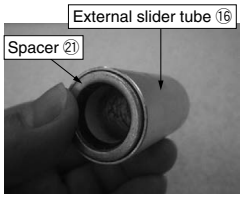 Picture 16: External slider tube assembly 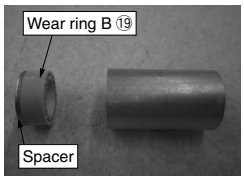 Picture 17: Wear ring B removal 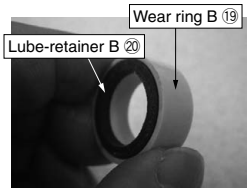 Picture 18: Wear ring B, Lube-retainer B	· When installing piston seal, apply grease from the grease pack included in the seal kit, or from the specified grease pack, to the seal groove. · For ø6 piston seals, there is a designated mounting direction. Install the piston seals on both sides with the lips facing outward. · For piston seals other than ø6, install 1 in any one of the installation grooves. There is no designated mounting direction. · For wear ring A, only ø10 cannot be replaced. · Allow the Lube-retainer to soak in the grease for approx. 2 hours before installing it. · Lube-retainer A is made of a material that does not stretch easily, so if it is pulled forcibly, it will not return to its original state. · When removing the external slider tube assembly, be careful not to bump it as this may result in the internal magnets, etc., popping out. · When replacing wear ring B and Lube-retainer B, perform removal on each side of the external slider tube, one side at a time. · When replacing the seals, do not disassemble down to the magnet and yoke. Mounting the magnet in the wrong direction (polarity) during reassembly may result in reduced magnetic holding force.

∗ Replace the seals other than those described in this manual according to usage conditions.

3. How to insert the external slider and piston slider into the cylinder tube (Caution required)

No.	Process	Steps	Note
6	Reassembling	1) After completing the seal replacement, follow the disassembly procedure in the reverse order to reassemble. Procedures ① : Apply grease to the inner surface of the cylinder tube. ② : Place the piston slider on top of the external slider (for bore sizes ø6 and ø10). For bore sizes other than ø6 and ø10, the sliders have no insertion direction, so ignore this step. ③ : If the piston slider will not couple at the center of the external slider (Picture 20), rotate the piston slider 180° so it is positioned as in Picture 19. If incorrectly positioned sliders are inserted into the cylinder tube as is, they will not magnetically couple as required. In addition, the stoke will not operate normally. ④ : Insert the slider insertion tool into the cylinder tube. ⑤ : Reconfirm that the sliders are in the same state as in Picture 19. ⑥ : Apply extra grease to wear ring B and the Lube-retainer of the external slider. ⑦ : Insert the greased external slider into the cylinder tube. ⑧ : Remove the slider insertion tool from the cylinder tube. ⑨: Apply extra grease to the piston seal, wear ring A, and the Lube-retainer of the piston slider. ⑩ : Insert the greased piston slider into the cylinder tube. ⑪ : Manually move the external slider back and forth multiple times to spread the grease within the cylinder tube. ⑫ : Move the external slider to the stroke end, and lightly wipe off the excess grease adhering to the end surface of the piston slider. ⑬ : Insert the assembly from step ⑫ into the guide shaft and plate B, and follow the disassembly procedure in the reverse order to reassemble. (Be sure to do so on a flat surface.) ⑭ : Fit the external slider and piston slider into place inside the cylinder tube. (Refer to Fig. 4-1 and Fig. 4-2 on page 418-3.) ⑮ : Confirm that the positional relationship of the external slider and piston slider is correct. (Refer to Fig. 3 on page 418-3.) ⑯ : After completing step ⑮, place the cylinder on a flat surface again and confirm that there is no backlash due to twisting between the plates. If there is backlash present, loosen the bolts, etc., and re-tighten them. (Picture 21) 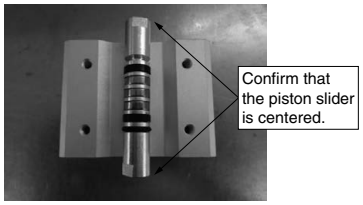 Picture 19: Correct positioning (the centers of the sliders are aligned) (ø10) 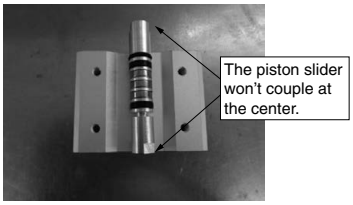 Picture 20: Incorrect positioning (the centers of the sliders are not aligned) (ø10) 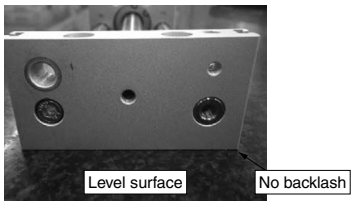 Picture 21: Check for backlash.	· If the external slider is inserted directly into the cylinder tube without the use of the slider insertion tool, the Lube-retainer attached to the external slider may get caught on the cylinder tube entrance, resulting in damage. Be sure to use the tool. (Refer to Fig. 2 on page 418-3.) · When reassembling, remove any hardened adhesive, oil, etc., from the threads of the bolts and screws, and reapply adhesive to prevent loosening. [Loctite No. 263 (High strength)]

∗ Specified grease (Grease pack): GR-S-010 (Same for all sizes)

[Slider insertion tool]

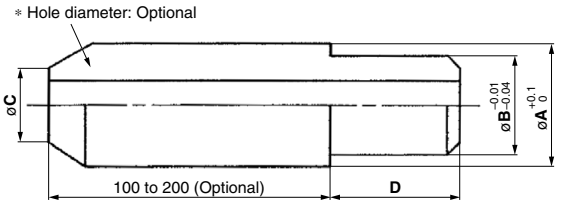

∗ For the release of air when inserting tubing

	ø6	ø10	ø15	ø20	ø25	ø32	ø40
A	7.6	12	16.6	21.6	26.4	33.6	41.6
B	6	10	15	20	25	32	40
C	4	8	13	18	23	30	36
D	20	20	30	30	40	50	60

Fig. 2 Slider insertion tool dimensions

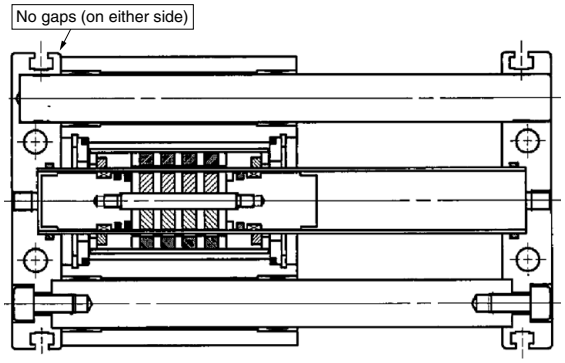

Fig. 3 External slider and plate gap dimensions (Under normal conditions)

[Slider fitting procedure]

◎ How to push the external slider with external force (by hand, etc.)

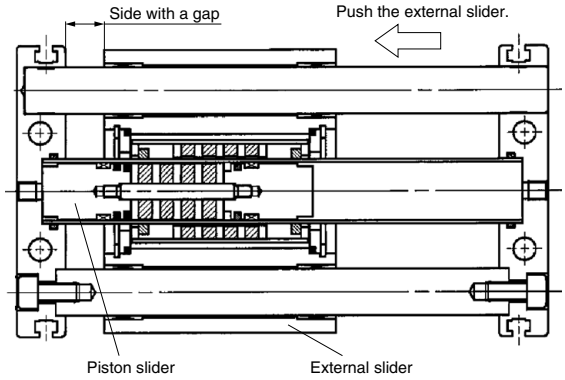

∗ The piston slider hits the plate, and the external slider cannot reach the stroke end.

Fig. 4-1 Slider fitting procedure (How to push in the external slider)

◎ How to push the piston slider with air pressure (approx. 0.5 MPa) (Opposite side of the fig. 4-1)

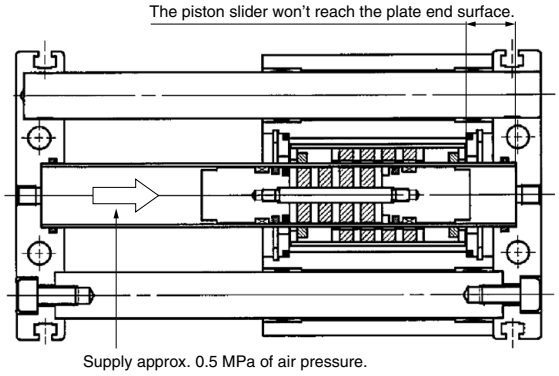

∗ The external slider hits the cover, and the piston slider cannot reach the stroke end.

Fig. 4-2 Slider fitting procedure (How to push in the piston slider)

SMC

1. Maintenance

If the cylinder needs to be disassembled to replace the piston seal, wear ring, etc., care should be taken for the following points.

1-1. To remove the external slider or the piston slider from the cylinder tube, the holding force must be released by shifting the positions of the external slider and the piston slider forcibly. Removing them without doing so may cause the respective magnets to attract each other, making them impossible to separate.

1-2. Upon completing the above step to remove the sliders, remove the cylinder tube and plate A from guide shafts A and B by loosening the hexagon socket head cap screw on the plate A side. (While carrying out replacement work (of the packing, etc.), please refrain from disassembling other parts of the product as air leakage may result.)

1-3. The magnet assembly (piston slider and external slider) must not be disassembled. Doing so may result in decreased holding force and other problems.

1-4. The piston slider and external slider have a set direction (L type and ø6, ø10).
Refer to the diagram below for details. Connect the external slider (slide block) and the piston slider and insert into the cylinder tube as shown in Fig. 1-(a). If the positioning resembles Fig. 1-(b), rotate the piston slider to insert.

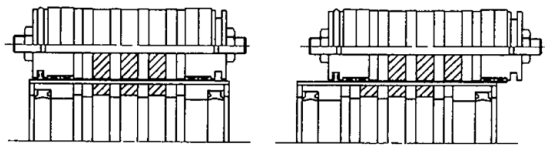

Fig. 1-(a) Correct direction Fig. 1-(b) Incorrect direction

Fig. 1 Direction of the slider

1-5. Before handling the magnet assembly, remove your wrist watch so as not to subject it to the effects of the strong magnetic field.

1-6. Thorough care should be taken to prevent the magnets from dropping on the floor or being knocked against metal objects.

2. Other Precautions

2-1. The slider contains parts made of iron, so care should be taken to prevent water droplets from entering the cylinder tube.

2-2. Grease should be periodically applied to the bearing part of the slide block.

2-3. After the product is reassembled, thoroughly flush the piping with air to remove any remaining dirt or cutting chips from inside the piping.

2-4. Care should be taken to prevent the external surfaces of the cylinder tube and the guide shaft from being scratched, dented, etc. Damage to the scraper, wear ring, and bushing may lead to a malfunction.

2-5. Do not use the cylinder (cylinder tube, guide shaft surface) in an environment where it will be exposed to (warm) water, coolant, etc.

⚠Caution

1. The cross roller part which is the guide system of the Air slide table, should not be taken apart because the pre-load has been already adjusted at the mounting stage.
2. Replenishment of grease during piston seal replacement.
   Apply special grease to the piston seal section and the sliding section.
   (Grease No.: GR-L)

1. Replacement of the Seal

1-1. Remove the hexagon socket head cap screws which connect the end plate and the table.
1-2. Remove the end plate.

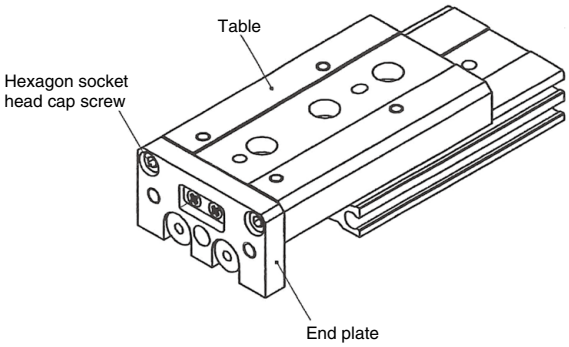

MXQ Series

Cautions after removing the end plate

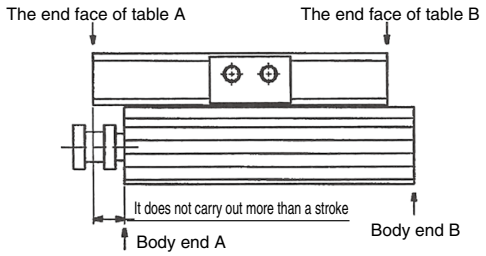

Make sure that table end A does not exceed the body end A at the full stroke after removing the end plate.
Make sure that table end B does not exceed the body end B at the full stroke after removing the end plate.
(The steel balls in the guide will fall out.)

1-3. Remove the basic internal retaining ring.
(Using a retaining ring tool)
1-4. Pull out the piston assembly.

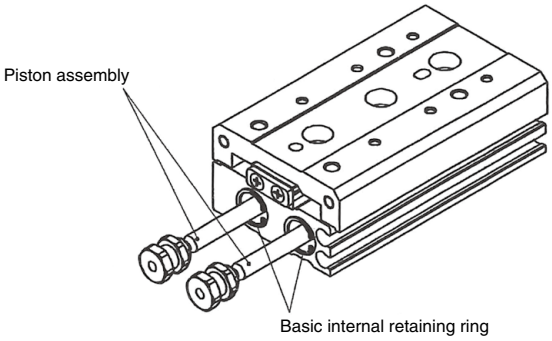

1-5. Apply grease to the piston seal and replace it.
1-6. Remove the basic internal retaining ring on the head cap side. (Using a retaining ring tool)
∗ For the MXQR
1-7. Remove the head cap, apply grease and replace the O-ring. ∗ For the MXQR

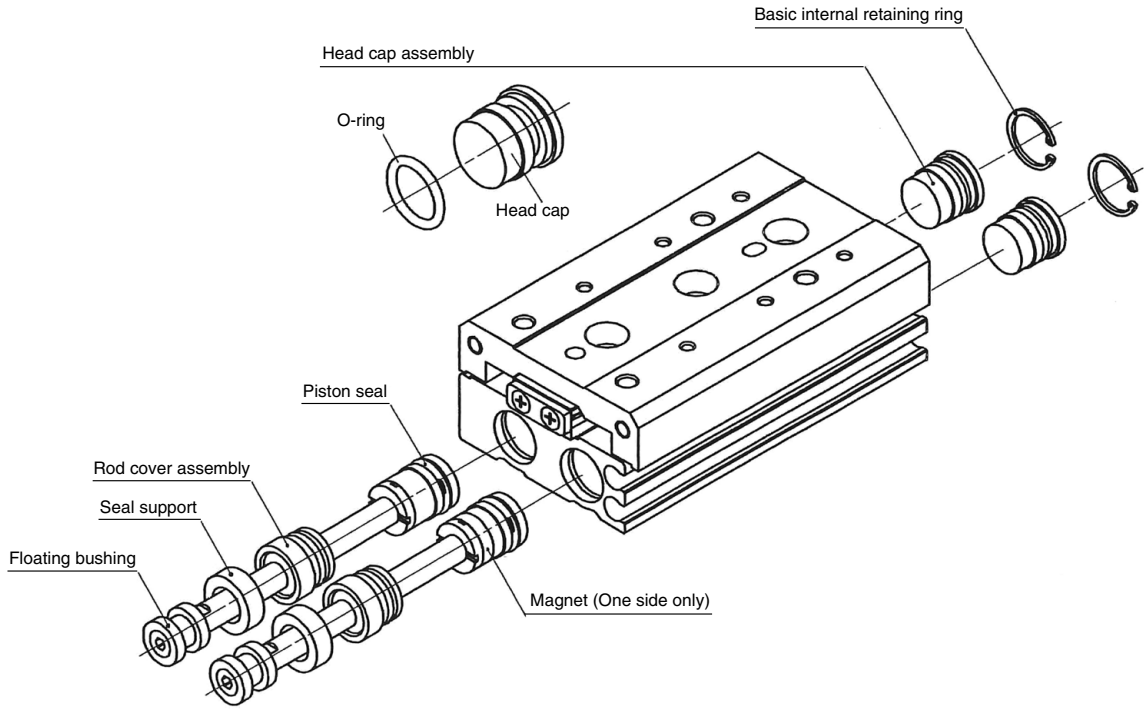

1-8. Remove the floating bushing.

ø6 and ø8 do not have width across flats. Lock onto the shaded part with a round nose chain pliers with side cutters. (It is not possible to lock onto areas other than the shaded part.)

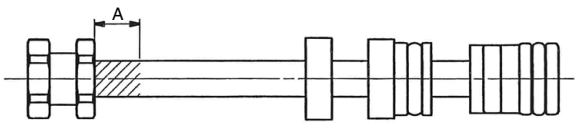

	MXS6	MXS8
Dimension A	3.2 mm or less	3.6 mm or less

	MXQ(R)6	MXQ(R)8
Dimension A	3.2 mm or less	3.6 mm or less

For ø12 to ø25, fix the width across flats of the rod with a wrench.

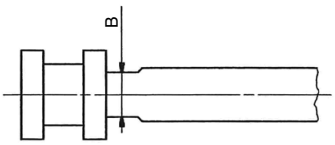

	MXS12	MXS16	MXS20	MXS25
Dimension B	5 mm	6 mm	8 mm	10 mm

	MXQ(R)12	MXQ(R)16	MXQ(R)20	MXQ(R)25
Dimension B	5 mm	6 mm	8 mm	10 mm

1-9. Remove the seal support.
1-10. Remove the rod cover assembly.
1-11. Apply grease to the O-ring and replace it.
1-12. Apply grease to the rod seal and replace it.

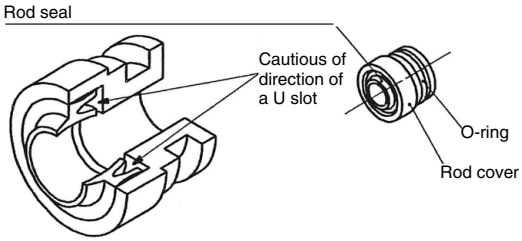

1-13. Mount the rod cover assembly and seal support to the piston rod assembly and insert it into the body.
1-14. Fix the seal support with the basic internal retaining ring. (Using a retaining ring tool)
1-15. Insert the head cap assembly into the body and fix it with the basic internal retaining ring. (Using a retaining ring tool)
∗ For the MXQR

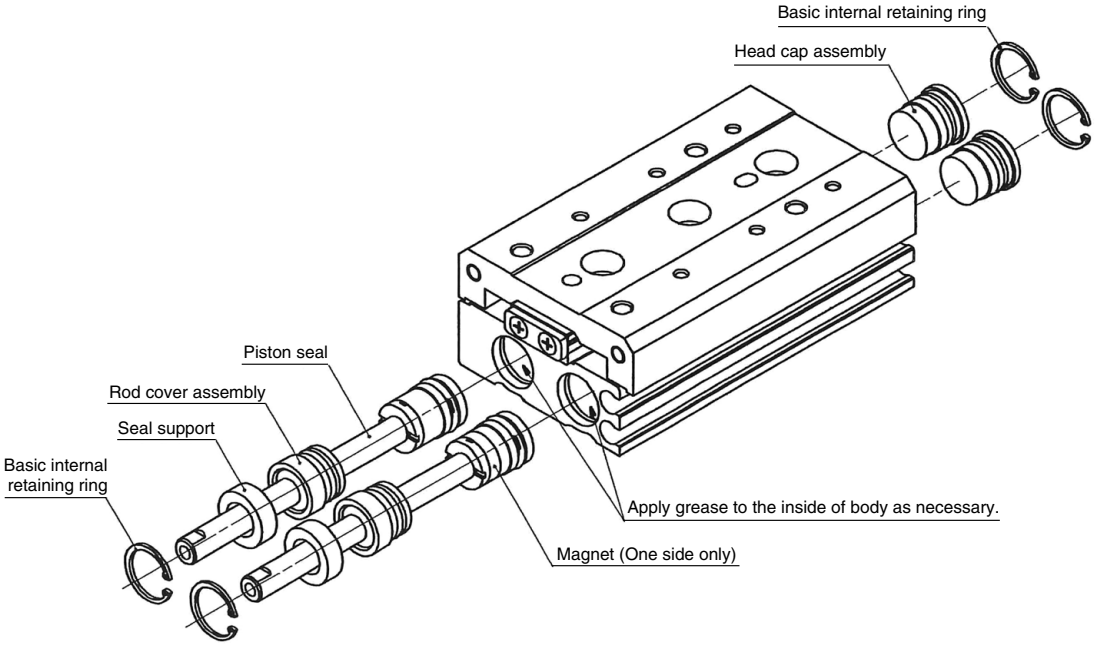

1-16. Mount the floating bushing onto the piston rod assembly.

ø6, ø8

Lock onto the shaded part.
It is not possible to lock onto areas other than the shaded part.

Model	Dimension A
MXS6	3.2 mm or less
MXS8	3.6 mm or less

Model	Dimension A
MXQ(R)6	3.2 mm or less
MXQ(R)8	3.6 mm or less

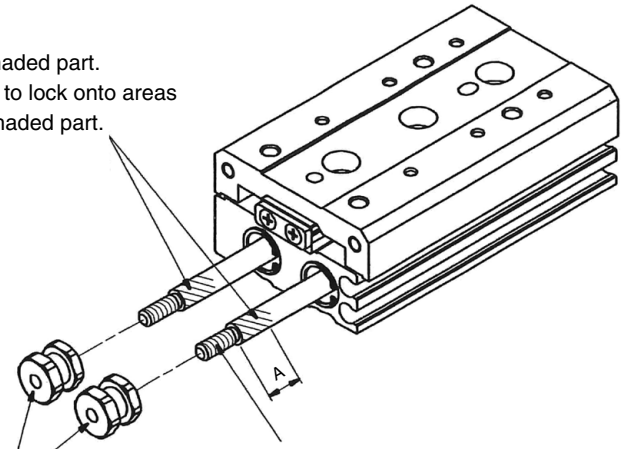

Floating bushing

Apply Henkel Japan Loctite No.263 or an equivalent adhesive.
If adhesive is squeezed out from part A after assembly, wipe it off.

Model	Tightening torque (N·m)
MXS6	0.21
MXS8	0.41

Model	Tightening torque (N·m)
MXQ(R)6	0.21
MXQ(R)8	0.41

ø12 to ø25

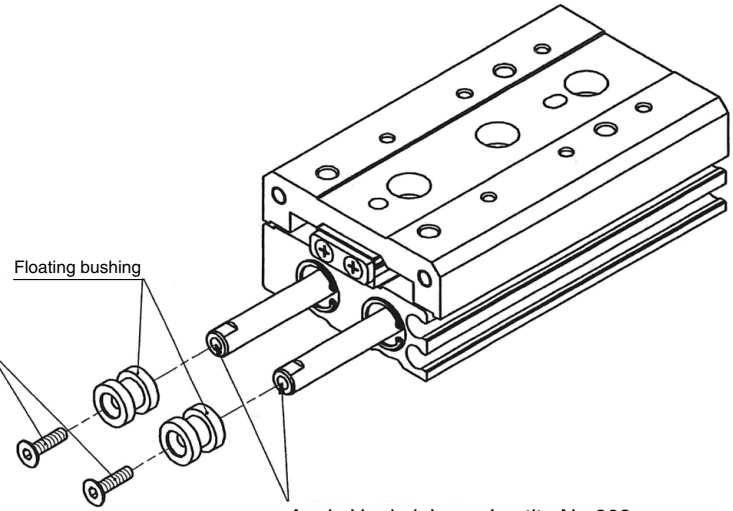

Floating bushing

Hexagon socket countersunk head screw

Apply Henkel Japan Loctite No.263 or an equivalent adhesive.

Model	Hexagon socket head cap screw	Tightening torque (N·m)
MXS12	M3 x 14	1.0
MXS16	M4 x 18	2.4
MXS20	M5 x 20	4.3
MXS25	M6 x 25	6.9

Model	Hexagon socket head cap screw	Tightening torque (N·m)
MXQ(R)12	M3 x 14	1.0
MXQ(R)16	M4 x 18	2.4
MXQ(R)20	M5 x 20	4.3
MXQ(R)25	M6 x 25	6.9

1-17. Mount the end plate.
1-18. Tighten the end plate mounting bolt with the specified torque.

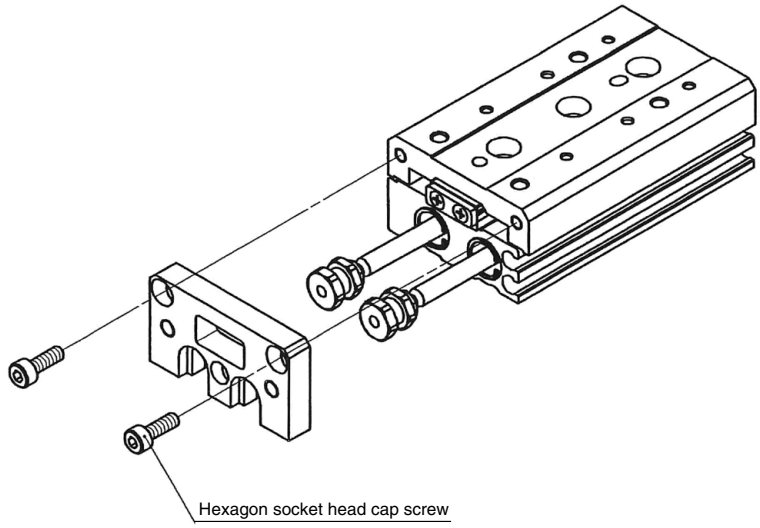

Apply Henkel Japan Loctite No.263 or an equivalent adhesive.

Model	Hexagon socket head cap screw	Tightening torque (N·m)
MXS6	M2.5 x 6	0.5
MXS8	M3 x 6	0.9
MXS12	M4 x 10	2.1
MXS16	M5 x 12	4.3
MXS20	M5 x 14	
MXS25	M6 x 18	6.9

Model	Hexagon socket head cap screw	Tightening torque (N·m)
MXQ(R)6	M2.5 x 6	0.5
MXQ(R)8	M3 x 6	0.9
MXQ(R)12	M4 x 8	2.1
MXQ(R)16	M5 x 10	4.3
MXQ(R)20	M5 x 16	
MXQ(R)25	M6 x 16	6.9

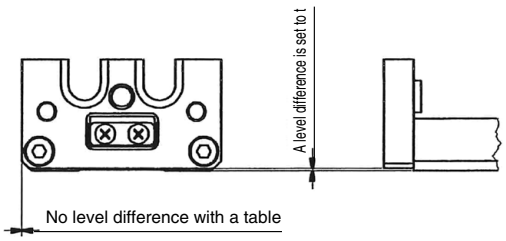

Model	Level difference t mm
MXS6	0.5
MXS8	
MXS12	
MXS16	0.3
MXS20	0.5
MXS25	

Model	Level difference t mm
MXQ(R)6	0.3
MXQ(R)8	
MXQ(R)12	
MXQ(R)16	
MXQ(R)20	0.5
MXQ(R)25	

⚠Caution

The cross roller section which is the guide system of the air slide table should not be disassembled because the pre-load has been already adjusted at mounting.

1 Replacement of the Seal

1-1. Loosen the hexagon socket head cap screws which connect the end plate to the table.

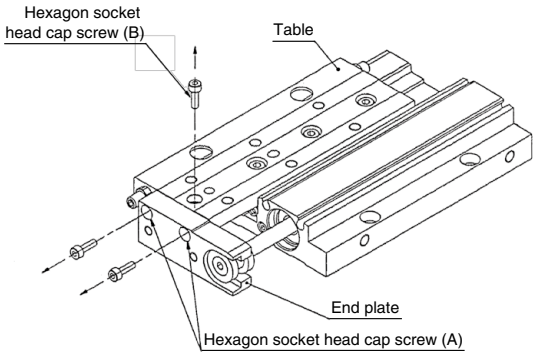

1-2. Move the end plate as indicated by the arrow to remove.

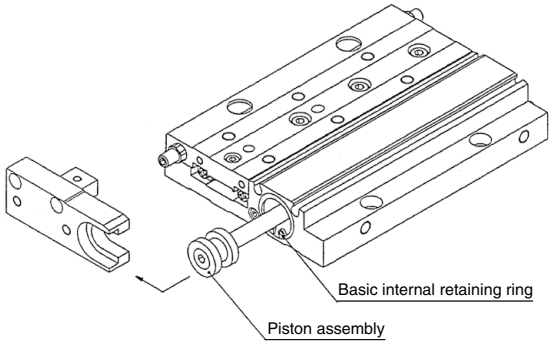

1-3. Take off the basic internal retaining ring with a retaining ring tool.

1-4. Pull out the piston assembly.

1-5. Apply grease to the piston seal and replace it.

1-6. Remove the basic internal retaining ring, and then remove the head cap assembly.

(Using a retaining ring tool)

1-7. Apply grease to the O-ring and replace it.

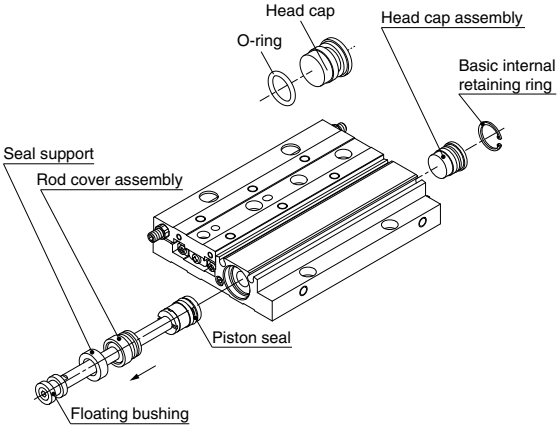

1-8. Remove the floating bushing.

ø8 do not have width across flats. Lock onto the shaded part with a round nose chain pliers with side cutters. (It is not possible to lock onto areas other than the shaded part.)

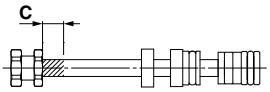

	MXF8
Dimension C	3.6 mm or less

For ø12 to ø20, fix the width across flats of the rod with a wrench.

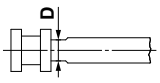

	MXF12	MXF16	MXF20
Dimension D	5 mm	6 mm	8 mm

1-9. Remove the seal support.

1-10. Remove the rod cover assembly.

1-11. Apply grease to the O-ring and replace it.

1-12. Apply grease to the rod seal and replace it.

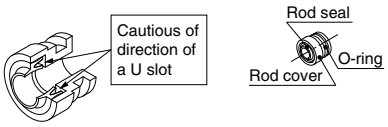

1-13. Mount the rod cover assembly and seal support to the piston rod assembly and insert it into the body.

1-14. Fix the seal support with the basic internal retaining ring. (Using a retaining ring tool)

1-15. Insert the head cap assembly into the body and fix it with the basic internal retaining ring. (Using a retaining ring tool)

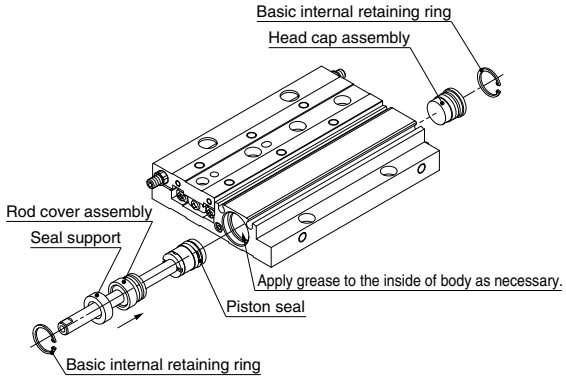

1-16. Mount the floating bushing onto the piston rod assembly.

ø8

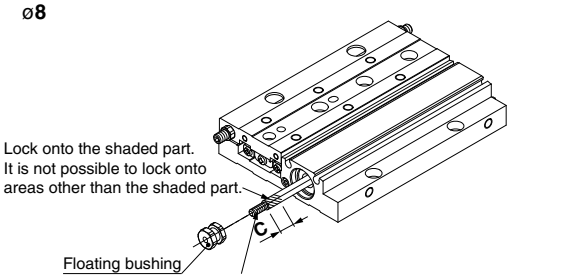

Model	Tightening torque (N·m)
MXF8	0.41

Loctite No. 263 of Henkel Japan Ltd. or its equivalent is applied.
If adhesive is squeezed out from part A after assembly, wipe it off.

ø12 to ø20

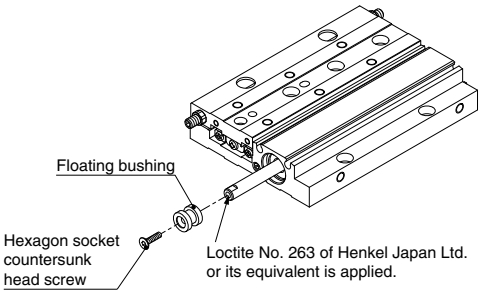

Model	Hexagon socket countersunk head screw	Tightening torque (N·m)
MXF12	M3 x 14	1.0
MXF16	M4 x 18	2.4
MXF20	M5 x 20	4.3

1-17. Mount the end plate.

1-18. Tighten the end plate mounting bolt with the specified torque.

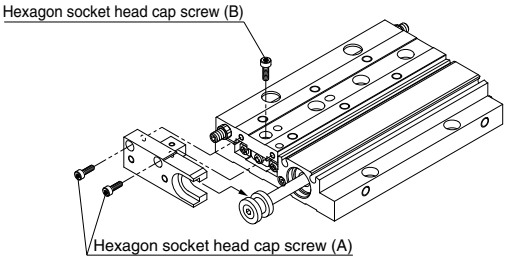

End plate attachment (A)

Model	Hexagon socket head cap screw	Tightening torque (N·m)
MXF8	M2 x 10	0.25
MXF12	M2.5 x 10	0.47
MXF16	M3 x 10	0.88
MXF20	M4 x 14	2.06

Loctite No. 263 of Henkel Japan Ltd. or its equivalent is applied.

End plate attachment (B)

Model	Hexagon socket head cap screw	Tightening torque (N·m)
MXF8	M2 x 8	0.25
MXF12	M2.5 x 8	0.47
MXF16	M3 x 10	0.88
MXF20	M4 x 14	2.06

Loctite No. 263 of Henkel Japan Ltd. or its equivalent is applied.

1 Replacement of the Seal

1-1. Remove the stopper block assembly.

1) Remove the stopper block mounting bolts from the end plate side, and then remove the stopper block.

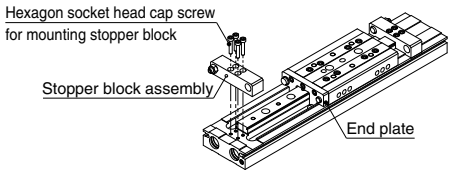

1-2. Remove the end plate.

<MXW12, 16, 20, 25>

1) Remove the end plate mounting bolts.
2) Holding the width across flats of the rod with a wrench, remove the floating bushing mounting bolt.
3) Remove the end plate.

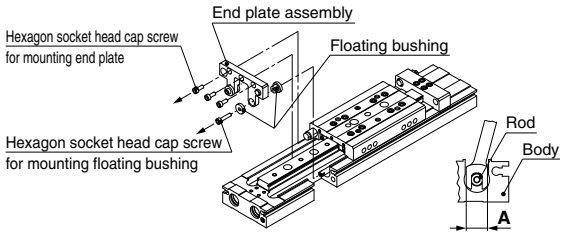

	MXW8	MXW12	MXW16	MXW20	MXW25
Dimension A	8	85	14.5	18	23.5
Width across flats	3.5	5	6	8	10

<MXW8>

1) Remove the end plate mounting bolts.
2) Holding the width across flats of floating bushing A with a wrench, remove the floating bushing mounting bolt.
3) Remove floating bushing B and the end plate.
4) Holding the width across flats of the rod with a wrench, remove floating bushing A.

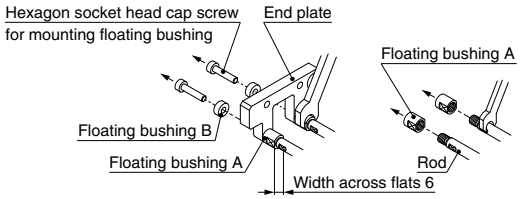

1-3. Remove the table assembly.

1) Remove the table mounting bolts, and then remove the table assembly.

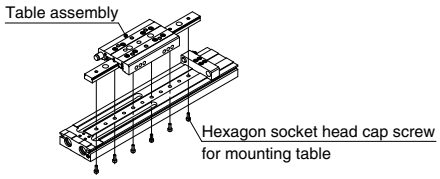

1-4. Remove the piston rod assembly.

1) Remove the set screws securing the rod cover from the top and bottom surfaces of the body.
2) Remove the basic internal retaining ring, and then, using a rod of øB or less, push out the head caps and piston rod assemblies.

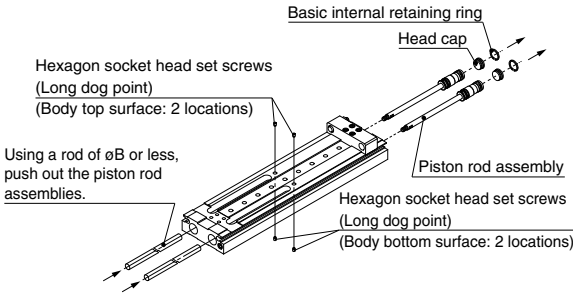

	MXW8	MXW12	MXW16	MXW20	MXW25
øB	7	11	15	19	24

1-5. Remove the rod cover assembly from the piston rod assembly.

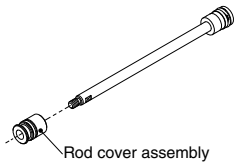

1-6-1. Replacement procedure of the piston seal

∗ Avoid torsion, etc.

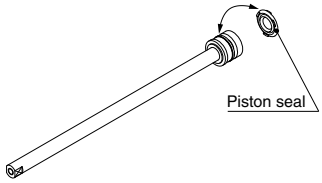

1-6-2. O-ring replacement

∗ Avoid torsion, etc.

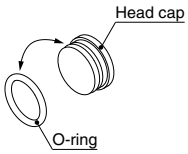

1-6-3. Rod seal and O-ring replacement

∗ Avoid torsion, etc.

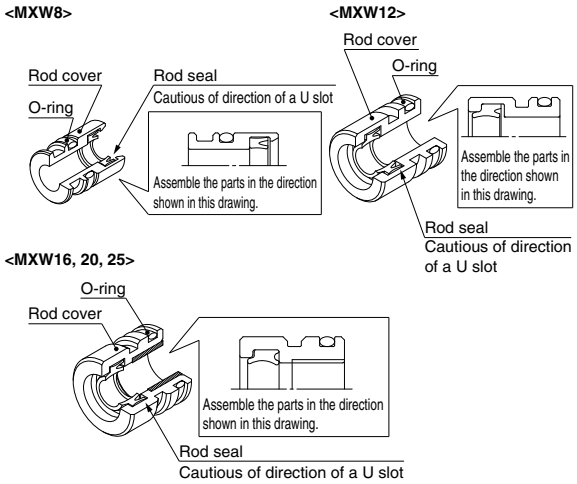

1-7. Mount the rod cover.

1) Mount the rod cover assemblies to the piston rod assemblies.
2) Mount the piston rod assemblies to the product body.
3) Secure the rod cover assemblies with the set screws. Tighten the rod cover assembly set screws in the order stated below.
   ①Body bottom surface side
   ②Body top surface side
4) Mount the head caps and basic internal retaining ring.

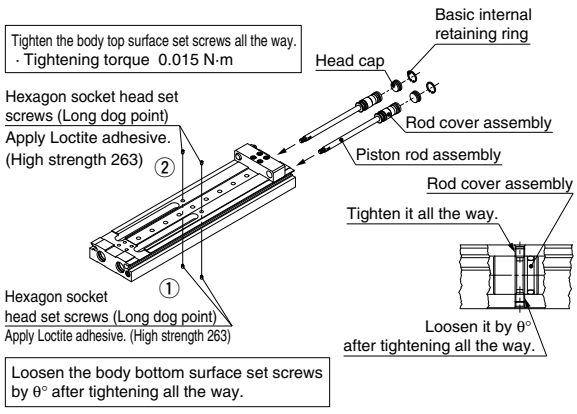

Rod cover assembly insertion direction

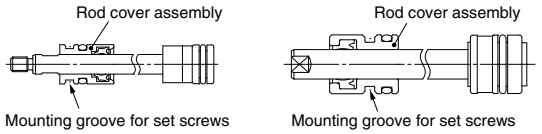

	MXW8	MXW12	MXW16	MXW20	MXW25
θ°	40°	60°	60°	40°	40°

1-8. Mount the table assembly.

1) Push the table assembly all the way in against the body and stopper block to perform positioning, and then mount the table assembly using the bolts.

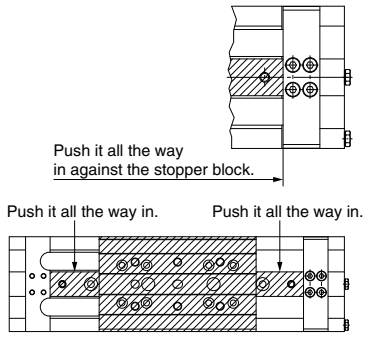

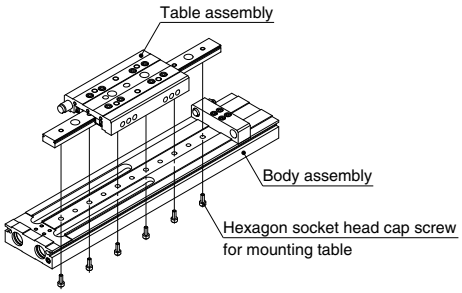

Table attachment

Model	Hexagon socket head cap screw	Tightening torque (N·m)
MXW8	M3 x 16	1.1
MXW12	M4 x 20	2.5
MXW16	M5 x 25	5.1
MXW20	M6 x 35	8.6
MXW25	M8 x 40	21.6

Adhesive: Loctite 243 adhesive

1-9. Mount the end plate assembly.

<MXW12, 16, 20, 25>

1) Mount the floating bushings to the end plate.
2) Holding the width across flats of the rod with a wrench, tighten the floating bushing mounting bolt.
3) Tighten the end plate mounting bolt.

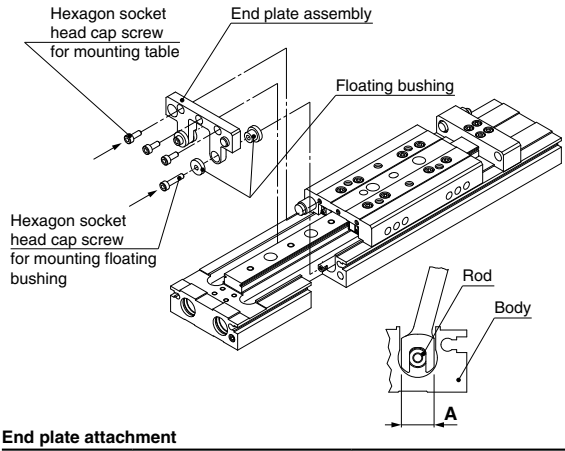

End plate attachment

Model	Hexagon socket head cap screw	Tightening torque (N·m)
MXW8	M3 x 8	0.6
MXW12	M3 x 8	0.6
MXW16	M4 x 12	1.4
MXW20	M5 x 12	2.8
MXW25	M6 x 16	4.8

Adhesive: Loctite 243 adhesive

Floating bushing attachment

Model	Hexagon socket head cap screw	Tightening torque (N·m)
MXW12	M3 x 14	1.1
MXW16	M4 x 20	2.5
MXW20	M5 x 20	5.1
MXW25	M6 x 30	8.6

Adhesive: Loctite 243 adhesive

<MXW8>

1) Holding the width across flats of floating bushing A with a wrench, tighten the floating bushing mounting bolt with a tightening torque of 1.1 N·m.
2) Holding the width across flats of the rod with a wrench, mount the end plate assembly by tightening the floating bushing mounting bolt with a tightening torque of 0.6 N·m.
3) Tighten the end plate mounting bolt.

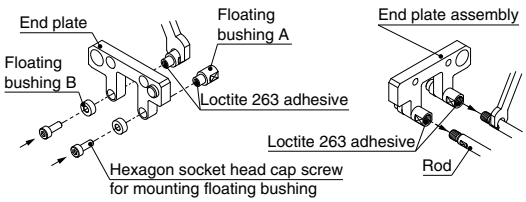

1-10. Mount the stopper block assembly.

1) Pushed all the way in against the body, perform positioning as shown below, and then mount the stopper block assembly using the bolts.

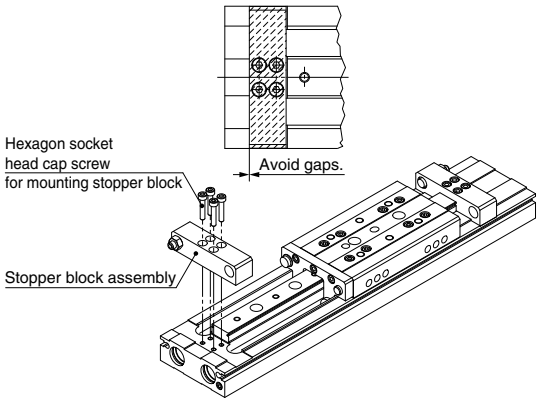

Stopper block attachment

Model	Hexagon socket head cap screw	Tightening torque (N·m)
MXW8	M2.5 x 15	0.3
MXW12	M3 x 16	0.6
MXW16	M4 x 20	1.4
MXW20	M5 x 30	2.8
MXW25	M6 x 40	4.8

Adhesive: Loctite 243 adhesive

1. Replacement of the Seal

MXPJ6

1-1. Remove the basic internal retaining ring. (Using a retaining ring tool)
1-2. Remove the end cap.
1-3. Remove the piston.

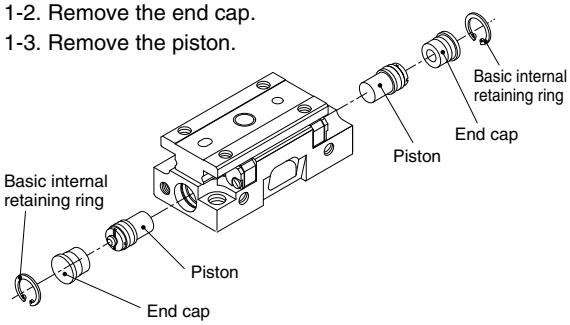

1-4. Apply grease to the piston for replacement.

1-5. Apply grease to the O-ring for replacement.

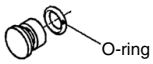

1-6. Apply grease to the piston surface.

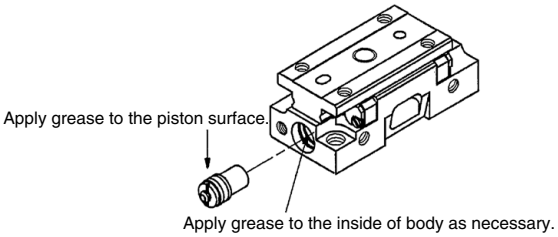

1-7. Insert the piston and assemble parts in the reverse order of removal.

MXP6

1-1. Remove the bolts for end plate mount.
1-2. Remove the end plate.
1-3. Remove the O-ring on the end plate.

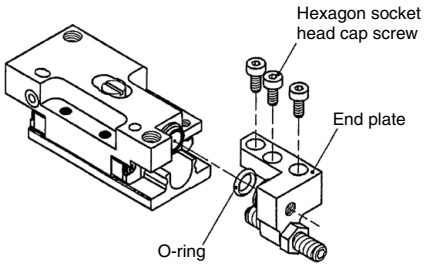

1-4. Remove the basic internal retaining ring. (Using a retaining ring tool)
1-5. Remove the end cap.
1-6. Remove the piston.

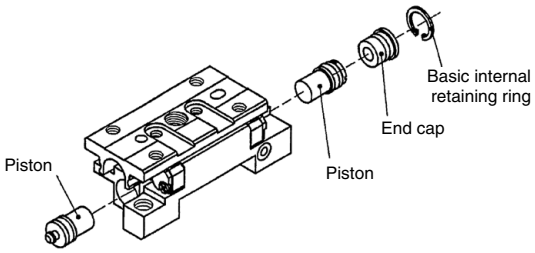

1-7. Apply grease to the piston for replacement.

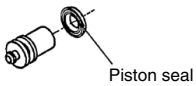

1-8. Apply grease to the O-ring for replacement.

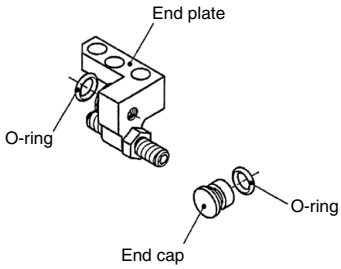

1-9. Apply grease to the piston surface.

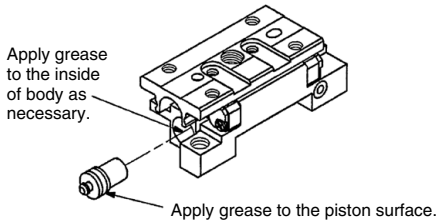

1-10. Insert the piston and assemble parts in the reverse order of removal.

Note) Tighten the end plate mounting bolt with the specified torque.

Bolt size	Tightening torque
M2 x 5	0.27 N·m

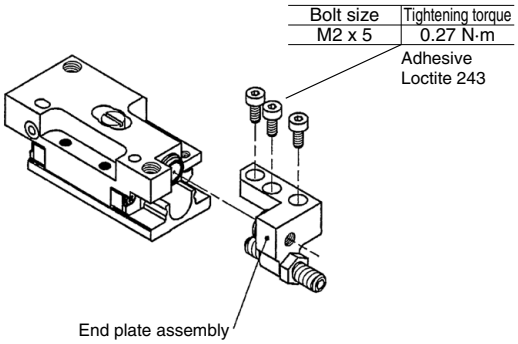

No gap is present at the mating surface between the body assemblies.

MXP8, 10, 12, 16

1. Remove the bolts for end plate mount.
2. Remove the end plate.
3. Remove the tube and the O-ring.
4. Apply grease to the O-ring and replace it.
5. Remove the joint shaft. Remove the piston assembly from the body.
6. Apply grease to the piston seal and replace it.

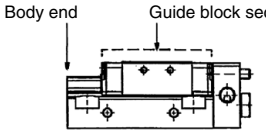

Make sure that the guide block will not exceed the body end surface after removing the joint shaft. (The steel balls in the guide will fall out.)

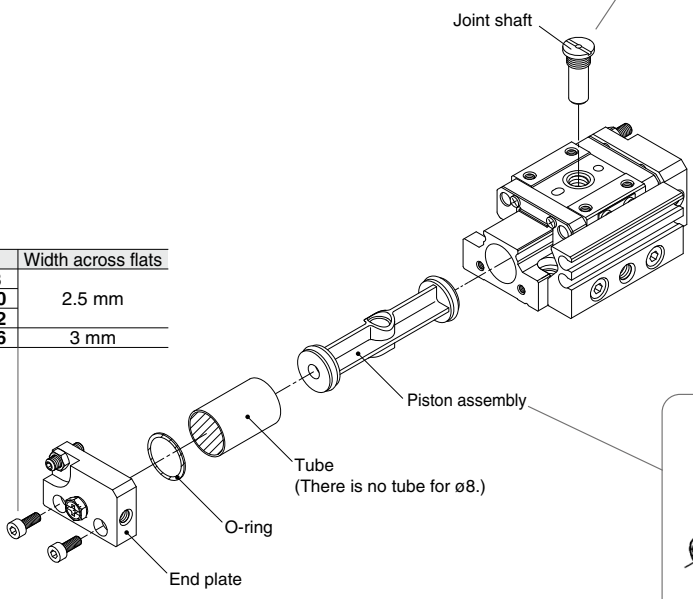

Type	Width across flats
MXP8	2.5 mm
MXP10	
MXP12	
MXP16	3 mm

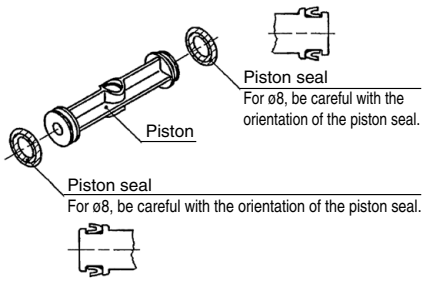

7. Insert the piston assembly to the body, and tighten the body with the joint shaft.
8. Apply grease to the shaded part of the tube inner surface if necessary. (See the drawing of previous page)
9. Mount the tube and the O-ring.
10. Mount the end plate.
11. Fasten bolts for the end plate mount with the specified torque.

Note 1) Assemble the end plate so that A, B dimensions will be values on table below.

(mm)

Type	A	B
MXP8	0.2	0.2
MXP10		
MXP12	0.5	0.3
MXP16		

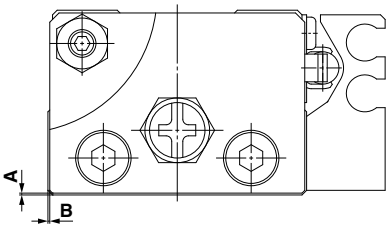

Type	Tightening torque joint shaft
MXP8	0.4 N·m
MXP10	0.7 N·m
MXP12	1.8 N·m
MXP16	3.6 N·m

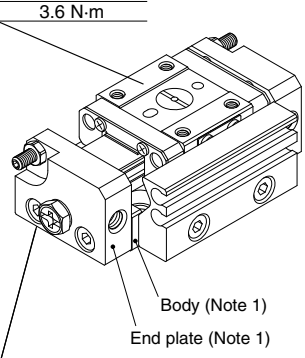

Type	Bolt torque
MXP8	0.65 N·m
MXP10	1.14 N·m
MXP12	
MXP16	2.70 N·m

Adhesive
Loctite 243

12. Remove the end plate mounting bolt on the opposite side.
13. Remove the end plate on the opposite side.
14. Remove the tube and the O-ring.
15. Apply grease to the O-ring and replace it.
16. Apply grease to the shaded part of the tube inner surface if necessary.
17. Mount the tube and the O-ring.
18. Mount the end plate on the opposite side. (∗2)
19. Tighten the end plate mounting bolt on the opposite side with the specified torque.

Note 2) Assemble the end plate so that A, B dimensions will be values on table below. (As well as ∗1)

(mm)

Type	A	B
MXP8	0.2	0.2
MXP10		
MXP12	0.5	0.3
MXP16		

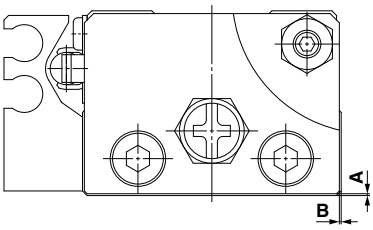

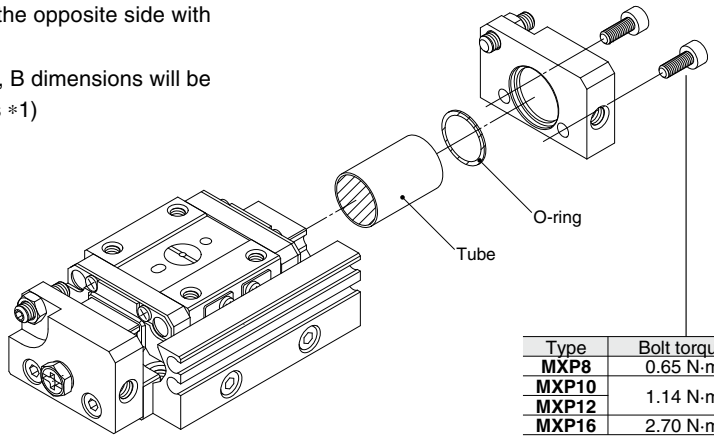

Type	Bolt torque
MXP8	0.65 N·m
MXP10	1.14 N·m
MXP12	
MXP16	2.70 N·m

Adhesive
Loctite 243

1. Replacement of the Seal

1-1. a. Remove the guide block fixing studs.

Note) Take care so that the guide block would not come off even partially to prevent a steel ball of the guide block from coming out and becoming unavailable.

b. Loosen the switch rail fixing studs and disconnect the switch rail.

c. Loosen the end plate fixing hexagon socket head cap screws and disconnect the end plate.

d. Disconnect the cylinder assembly.

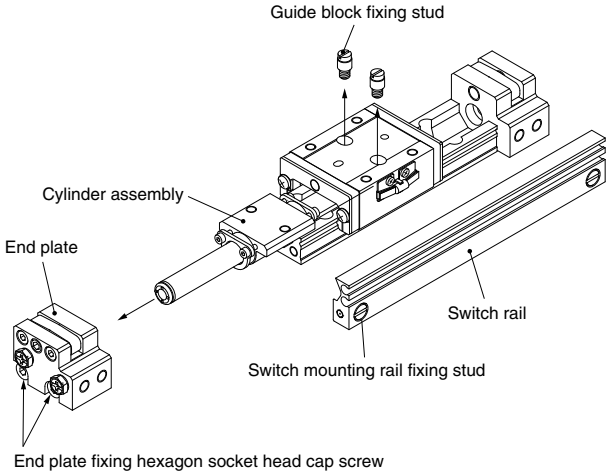

1-2. a. Take off the end cap from the tube of the cylinder assembly.

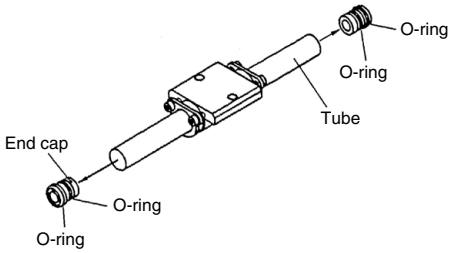

1-3. a. Insert the guide into the tube and hold the piston slider.

Note) Do not damage an internal face of the tube at this time.

b. Move the external slider forcedly to make holding force unable to act.

c. Take off the piston slider from the tube.

d. Take off the external slider from the tube.

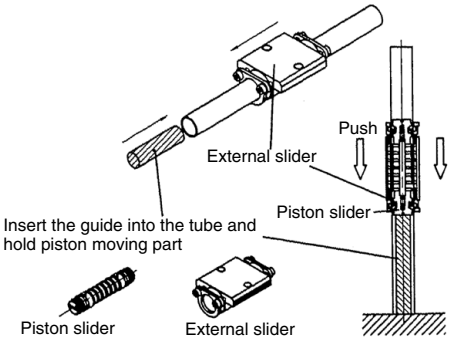

1-4. a. Loosen hexagon socket head bolts on both end faces of the body and disconnect the spacer.

Note) Take care so that magnet B and yoke B would not come out.

b. Take off wear ring B and the cylinder scraper from the spacer and replace each with new one.

Note) Pay attention to the mounting direction of cylinder scraper.

c. Tighten hexagon socket head cap screws on right end face with referential mark on body turned front until spacer is made close to body tightly.

d. Tighten hexagon socket head cap screws on left end face with referential mark on body turned front until spacer is mounted on body with clearance.

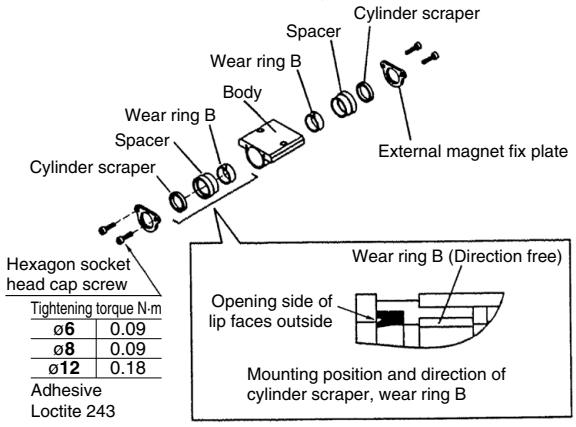

Tightening torque N·m	
ø6	0.09
ø8	0.09
ø12	0.18

Adhesive
Loctite 243

Note) Tighten each of 2 hexagon socket head cap screws by turn gradually until specified torque is reached to make force given to them even.

Note) Before tightening, apply the specified adhesive (Loctite 243 or equivalent) on hexagon socket head cap screws.

Caution on mounting external slider

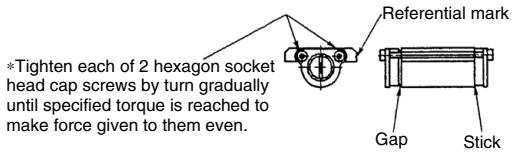

Tighten the bolt which comes right when referential mark is turned front. (Gap is created between left spacer and body.)

1-5. a. Holding one piston by flat head screwdriver, loose the other piston by flat head screwdriver.

b. Take off yoke A and magnet A from shaft. Magnet A should be kept with stick inserted.

Note) Mounting direction of magnet A is specified. So, keep them in the manner like above not to be unable to recognize correct mounting direction.

c. Take off wear ring A and the piston seal and replace each with new one.

Note) Mind mounting direction of piston seal in MXY6 and MXY8.

Note) Apply the specified grease on wear ring A and the piston seal.

Note) Confirm that the seal is mounted without twist.

Note) The piston seal is mounted only on one side in MXY12.

d. Insert yoke A and magnet A into shaft the reverse procedure.

e. Tighten the piston to the shaft with the specified torque on right figure.

Note) Apply the specified adhesive (Loctite 263 or equivalent) on the end of shaft.

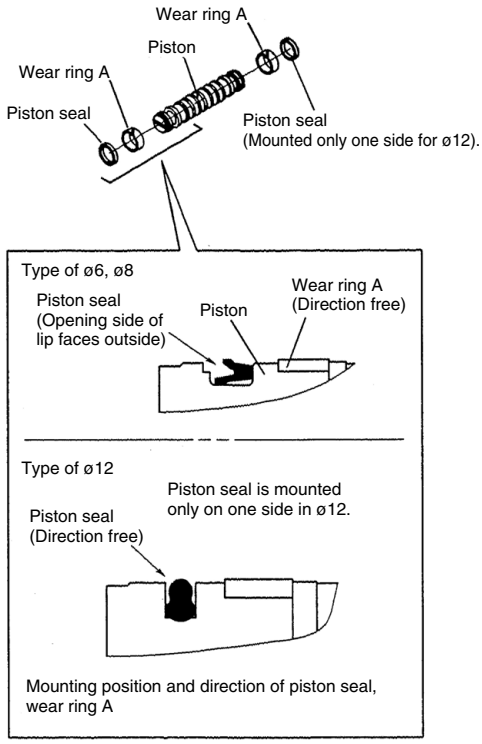

Tightening torque N·m	
ø6	0.09
ø8	0.09
ø12	0.18

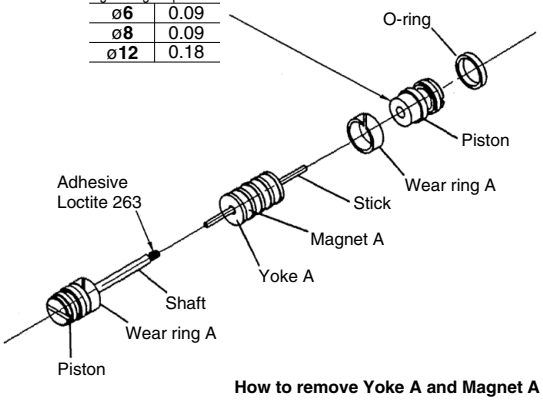

How to remove Yoke A and Magnet A

1-6. a. Apply grease all around the piston slider.
b. Apply grease all around the internal face of the external slider.
c. Insert the piston moving part and external slider into the tube.
d. Move the external moving part to a little over stroke end manually to engage it with the piston slider (i. e. to locate magnet coupling on adequate position.)
e. Apply grease evenly on the internal and external face of the tube.

Note) Do not close external slider to the end of tube to apply the grease because all of grease is brought to there during operation.
Note) Use a specified one for grease.

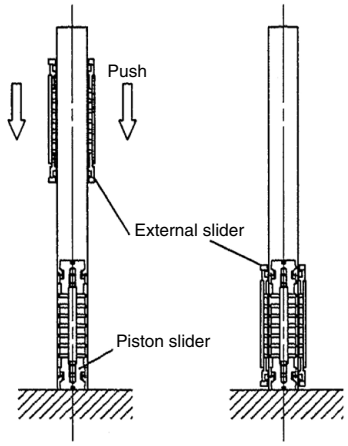

Before coupling **After coupling**

Caution on applying grease on tube

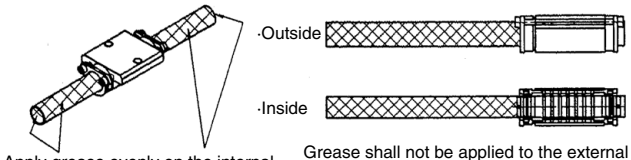

Apply grease evenly on the internal and external face of the tube

Grease shall not be applied to the external and piston slider closed to the tube end.

1-7. Put the end cap in the tube.

Note) Ensure the O-ring does not come off.

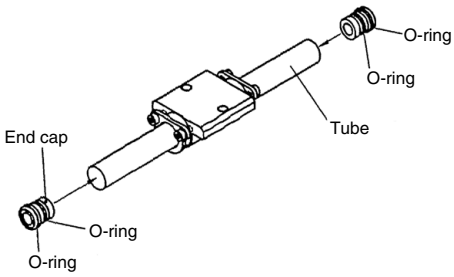

1-8. a. Tighten the end plate on left side to rail temporarily with referential mark on the guide block turned to front (with port bore turned to front as well).

Note) Apply the specified adhesive (Loctite 243 or equivalent) on the end plate holding hexagon socket head cap screws.

b. Pass the cylinder assembly between the rail and the guide block with referential mark on the cylinder assembly turned to front and then tighten the end plate on right side temporarily like one on left side.

c. Tighten the guide block holding stud by torque specified on right figure to hold the guide block to the external slider.

Note) Apply the specified grease on the side of the guide block fixing stud except for threaded part.

d. Tighten the end plate fixing hexagon socket head cap screw by torque specified on right figure.

e. Tighten the switch rail holding stud by torque specified on right figure to hold the switch rail to the end plate.

Note) Keep step among the end plate, switch rail and rail within the value shown on right figure.

Note) Ensure the switch rail does not contact magnet by moving the guide block all over its movable part.

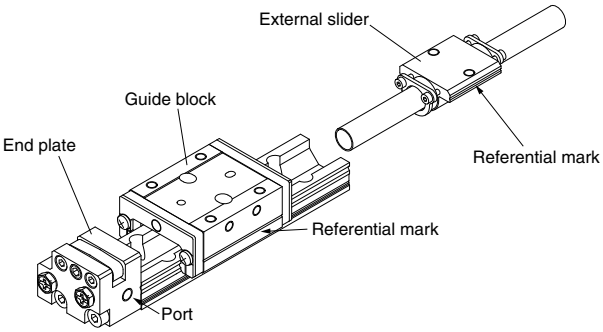

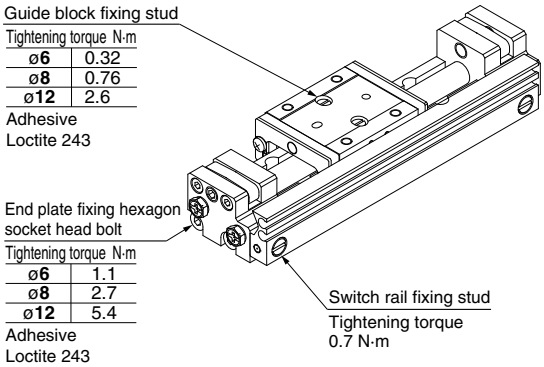

Step between end plate and rail shall comply with table.

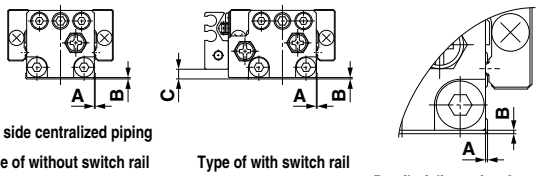

One side centralized piping

Type of without switch rail

Type of with switch rail

Detail of dimension A and B

Model	A	B	C
MXY6	0.3	0.3	0.5
MXY8	0.3	0.5	3.5
MXY12	0.3	0.5	8.5

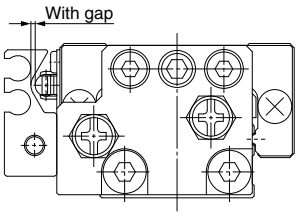

⚠ Caution

Cylinder needs to be disassembled/assembled under the clean environment. Use a clean cloth.
Before disassembly, eliminate the dirt on the outer surface so that foreign objects do not enter the cylinder or the guide.

1. Disassembly

1-1. Tools
A retaining ring plier for hole, wrench, hexagon wrench, socket wrench (or air impact wrench).

1-2. Fix the piston rod so that it is not scratched. Remove the guide rod assembly by loosening the plate mounting bolt with a hexagon wrench or socket wrench.
Or, loosen the plate set bolt with the air impact wrench to remove the guide rod assembly.
Continue the work without removing the guide rod from the plate.

1-3. Remove the 2 retaining rings (rod and head side) with retaining ring pliers, and pull out the collar, the head cover, and the piston rod assembly.
For air cushion type and end lock type, it is necessary to remove the collar and parts below.
Air cushion type (ø80, ø100)
• Set screw at the bottom of the cylinder.
End lock type
• End lock unit (See below)

Bore size (mm)	**Retaining ring size**	**Plate mount bolt tightening torque** (kgf·cm)
12	RTW-13	14
16	RTW-18	34
20	RTW-22	52
25	RTW-26	88
32	RTW-34	220
40	RTW-42	220
50	RTW-52	440
63	RTW-65	440
80	RTW-82	1,240
100	RTW-102	2,000

Removal of the End Lock (With End Lock)

1. Tools
A retaining ring plier for hole, hexagon wrench, wrench, socket wrench (or air impact wrench), or watchmaker's screwdriver.
2. Insert the manual bolt from the top of the end lock unit rubber cap, and screw the bolt into the lock piston, (Not necessary for -∗L, lock type)
3. Remove the 2 hexagon socket head cap screws to pull out the end lock unit.
4. For ø20 to ø63, remove the lock piston seal.
For ø80, ø100, remove the seal retainer and lock piston seal.
5. Remove the lock holder mounting bolt to remove the lock unit and gasket.

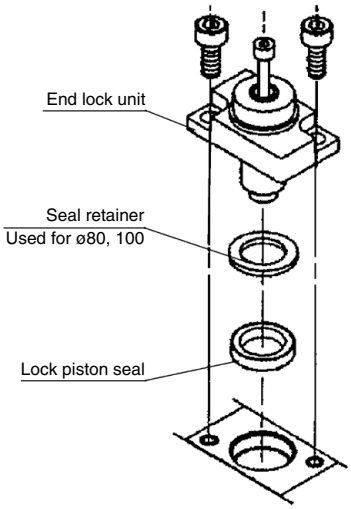

Fig. 1 How to remove the end lock

2. Removal of the Seal

2-1. Rod seal
a. Tool:
A watchmaker's screwdriver, etc.
b. Insert the driver to the collar front to pull out the seal like Fig. 2.
Do not damage the seal groove on the collar at this time.

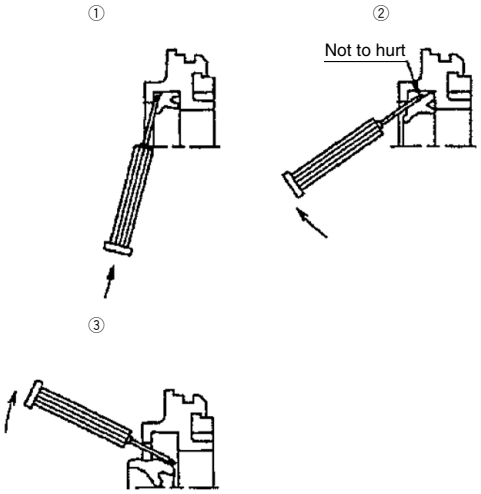

Fig. 2 How to remove the rod seal

2-2. Piston seal

Wipe off grease around the piston seal first to make removal easier.

Hold piston seal with one hand and push it into groove so that piston seal can be lifted off and pulled out without using a watchmaker's screwdriver. (Fig. 3)

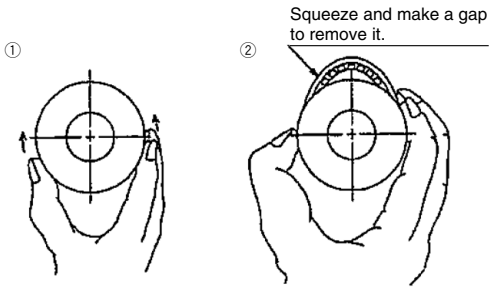

Fig. 3 How to remove piston seal

2-3. Gasket

Pull out the collar and the head cover outer rim or the gasket inside of the body (ø32 or larger) with precision driver.

2-4. Cushion seal (With air cushion only)

a. Tool: A watchmaker's screwdriver, etc.

b. As shown in Fig.4, pull out the cushion seal by inserting the precision screwdriver from the back of the seal and the head cover. Take care not to damage the seal groove at this time.

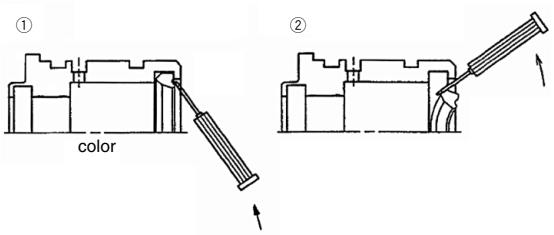

Fig. 4 Removal of the cushion seal

3. Application of Grease

Use grease pack in table or lithium soap base grease JIS2, or equivalent.

Table Grease pack no.

10 g type	GR-S-010
20 g type	GR-S-020

3-1. Rod seal

Apply grease slightly to outer circumference of new seal for replace. This helps the seal to accustom to the collar. For the grove, fill it with grease. This is necessary for operation.

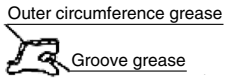

Fig. 4

3-2. Piston seal

Apply grease to outer/inner circumference of seal slightly and evenly to make mounting this to the piston easier.

3-3. Gasket

Apply grease slightly. Provide better sealing and stop falling.

3-4. Cushion seal (With air cushion only)

Apply grease to outer/inner circumference of seal slightly and evenly to make mounting this to the seal groove.

3-5. Cylinder parts

Apply grease to cylinder parts including the guide.

With End Lock

Use lithium soap radical grease JIS2 corresponding to such as "Nippon Oil Corporation multipurpose grease No. 2", "Idemitsu Daphne coronex No. 2", "Kyoseki lisonix grease No. 2".

4. Assembly

4-1. Mount seal

a. Rod seal

Mind the seal direction. Apply grease all over the seal and inner surface of the bush as Fig. 8. You may use a precision screwdriver to apply grease for small bore sizes.

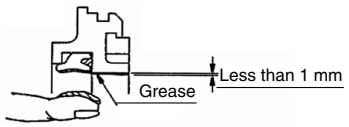

Fig. 8 Rod seal

b. Piston seal

Apply grease rubbing to seal groove and outer circumference.

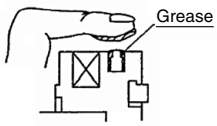

Fig. 9 Piston seal

c. Gasket (With rubber bumper)
Mount to the groove of the collar and the head cover. For ø32 or larger, mount to the inner groove of the body, not to the head cover.
This case, the gasket of the body is large type.

d. Gasket (With air cushion)
Mount to the groove of the collar and the head cover. For ø32 or larger, mount to the inner groove of the head cover and the body.
This case, the gasket of the body is large type.
Do not mount the gasket on the air passage (through hole groove) as in Fig.10.

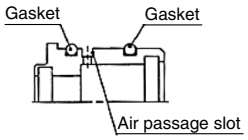

Fig. 10 Gasket mounting position

e. Cushion seal (With air cushion only)
Mount the seal in the correct direction. Apply grease thinly and evenly to the inner circumference of the seal. As the seal has a floating mechanism, it is normal to have some play.

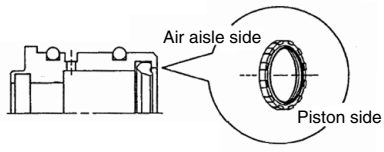

Fig. 11 Cushion seal mounting position

4-2. Assemble cylinder

a. Insert the head cover to the body to fix with a retaining ring.

b. Insert the collar to the piston rod.
Apply grease to the piston rod end or 30 degree of slope at the end of wrench flat, and insert the collar gently so that the piston seal is not hurt.

c. Insert the piston and the collar to the tube and fix it with a retaining ring.
Apply grease to the inlet of the tube and insert the piston and the collar gently so that the piston seal and the gasket are not hurt by the retaining ring groove.

d. Guide rod assembly assembling
Apply glue to the plate mounting bolt when mounting the guide rod assembly. Then, tighten the bolt with tightening torque in Table 1.

After assembling, ensure manually that work properly operate smoothly.
Check the air leakage.

With End Lock

1. Mount end lock
   Apply grease to the lock piston surface, lock holder inner surface to insert the gasket and lock holder. Then, fix them with new hexagon socket head cap screws included in accessories.
   Insert the end lock unit and fix it with new hexagon socket head cap screws included in accessories. (See drawing 12, 13, 14, 15)
   After assembling, ensure manually that end lock work properly and that the cylinder operate smoothly with lock released.

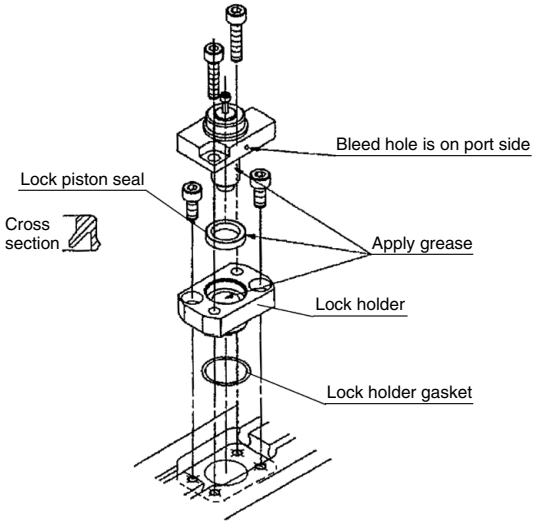

Fig. 12 End lock reassembled (ø20, ø25)

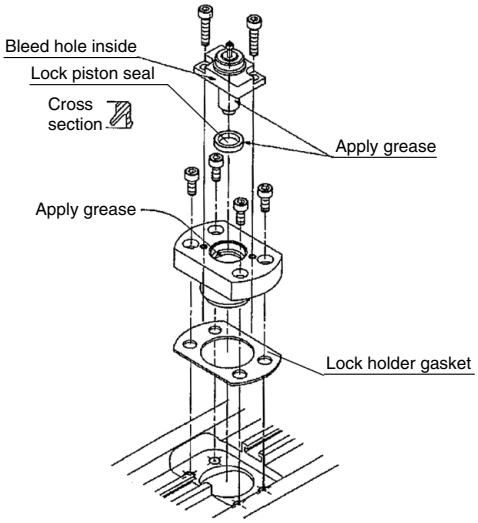

Fig. 14 End lock reassembled (ø50, ø63)

Cap and lock holder bolt tightening torque

Hexagonal bolt	**Bore size** (mm)	**Tightening torque** (N)
M3	**ø20 to ø63**	0.71 to 0.86
M5	**ø80, ø100**	2.65 to 3.24

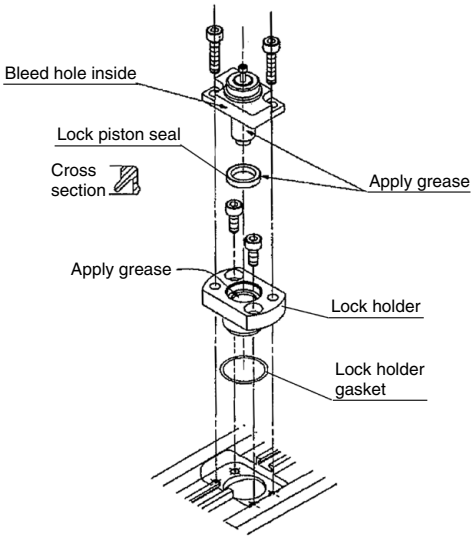

Fig. 13 End lock reassembled (ø32, ø40)

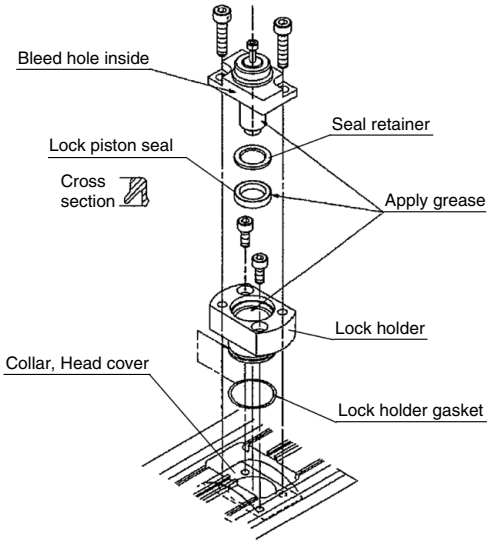

Fig. 15 End lock reassembled (ø80, ø100)

⚠ Caution

Replace the hexagon socket head bolt with a new one included in the seal kit to avoid air leakage.

Tighten the hexagon socket head bolts evenly to avoid air leakage.

⚠Caution

Disassemble and assemble the cylinder in a clean area. Remove dusts and foreign objects from external surfaces to prevent them from entering the cylinder during disassembly. Perform on a clean cloth.

1. Maintenance

1-1. When malfunction of cylinder occurs due to air leakage, replace the seal and gasket by referring to procedure shown below.

1-2. Replacement procedure

a. Remove 2 hexagon head bolts C ⑭ and separate upper part and lower part assemblies.

b. Remove 6 hexagon head bolts A ⑫ of the upper part assembly and remove plate ⑥.

c. Push the piston rod assembly (piston rod ⑤ + piston ④) from the rod seal side to pull the piston rod out of tube ②.

d. Remove piston seal ⑳ from piston ④ and replace it by new one. Apply grease on the overall surface of piston seal.

e. Remove rod seal ⑲ from rod cover ③ and replace it by new one. Care should be taken for the orientation of rod seal. Mount it by referring to the internal structural drawing.

f. Remove 4 hexagon head bolts B ⑬, separate body ① and end plate ⑦.

g. Remove 2 O-rings C ㉓ on the end plate side and replace them. Apply grease on the overall surface of gasket.

h. Remove O-ring B ㉒ from tube ② and replace it. Apply grease on the overall surface of gasket.

i. After all replacement is completed, reassemble the parts. To assemble, follow the disassembling procedure a to h in reverse order.

2. Caution at Assembly and Disassembly

2-1. Adhesive is applied to each bolt to prevent loosening. Since powders (adhesive) come out when the bolt is removed, care should be taken to prevent them from entering cylinder and sliding part.

2-2. Apply the adhesive (moderate strength) to each bolt at assembling.

2-3. When the upper part assembly is inserted to the lower part assembly, the bushing in the lower part assembly is not complete round. Therefore, press the bushing with the tube of the upper part assembly so that the bushing becomes complete round. Care should be taken not to break the bushing since broken bushing will cause a malfunction.

2-4. Insert the piston rod assembly to the same position as it was disassembled.
If the piston rod assembly is rotated, lifting and lowering ports would be reversed.

3. Disassembly

3-1. Separation of the upper part assembly from the lower part assembly

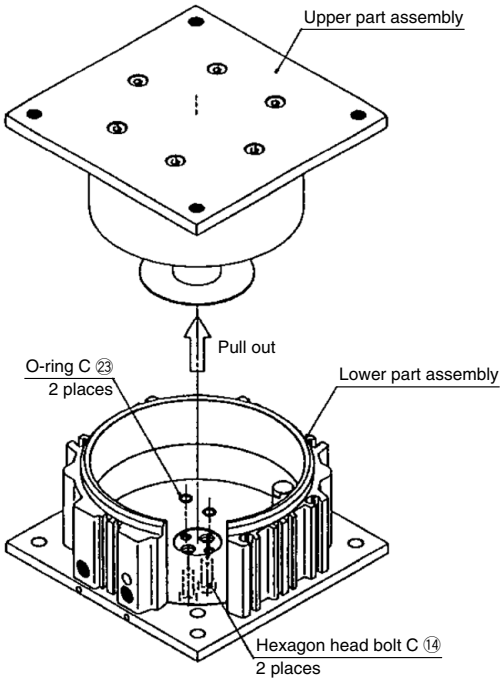

3-2. Disassembly of the upper part assembly

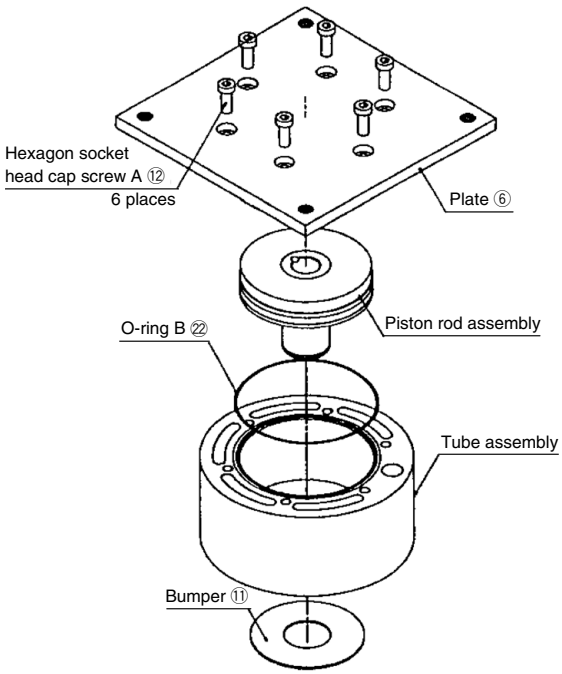

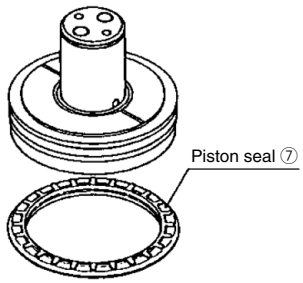

Replacement of the piston seal

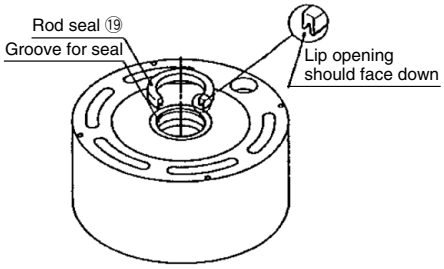

Replacement of the rod seal

3-3. Disassembly of the lower part assembly

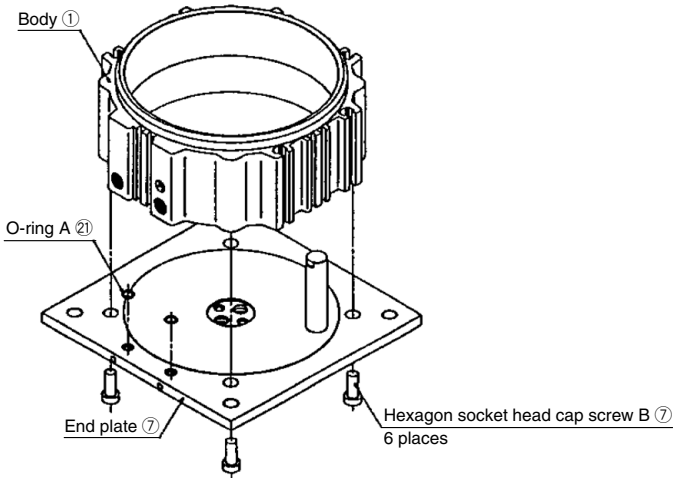

1. Disassembly

⚠Caution

Disassemble and assemble the cylinder in a clean area. Please begin working after it wipes off with a clean cloth, etc.

CXS Series

With end lock

1-1. Detach the lock unit (⑤ to ⑩) from the housing.

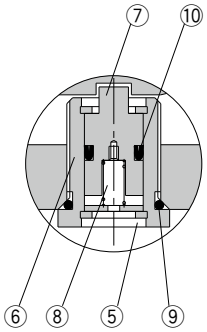

Fig. 1

[For the type with a retaining ring on the head cover side]

1-2. Loosen and remove the hexagon socket head cap screw and set screw which fix the plate, rod. Then pull the plate out of the rod.
At this occasion, screws are sometime hard to unscrew because they are applied Loctite. Pay attention not to damage the hexagon head.
As plates are sometime hard to unscrew as well, use a gear-puller not to damage the rods.

1-3. Detach the retaining rings on the side of the head cover using pliers (tool for installing a basic internal retaining ring).

1-4. Hit rods lightly with a plastic hammer, then pull them out from head cover side. At this occasion, they go through bearing part, so make sure there are no burrs or deformation. Burrs or deformations have to be removed by a file or sandpaper.

1-5. Detach the retaining rings on the side of the rod cover by using pliers (tool for installing a basic internal retaining ring), then the rod cover away in the same method of 1-4.

[For the type without a retaining ring on the head cover side]

1-2. Detach the retaining rings on the side of the rod cover using pliers (tool for installing a basic internal retaining ring).

1-3. Pull out the rod together with the plate from the housing.

1-4. Paying attention to the above items, pull the plate out from the rod, and then pull the rod cover out from the rod.
The seals are not reusable. They have to be replaced by the new one at the occasion of reassembling.
At this time, grease has to be applied to seals and kept away from the dust.

CXS Series

With end lock

1-6. Replace the O-ring and lock seal. Remove the retaining ring when you replace the lock seal.
The seals are not reusable. They have to be replaced by the new one at the occasion of reassembling.

2. Assembly

2-1. Reassemble the parts by reversing the disassembling process.
For the type without a retaining ring on the head cover side, reassemble without mounting the plate.
Confirm that the retaining ring fits securely in the mounting groove.

2-2. Mount the plate to the rod.
It is necessary for the rod to be in the extend state. Apply 0.2 MPa or more from the supply port of the head cover side. Tighten the hexagon socket head cap screw pressing the plate to the rod. Then, tighten the hexagon socket head set screw.
Make sure the product operates with the min. operating pressure (see table below) without any problem. (The product operates smoothly when it is moved by hand)

Bore size (mm)	6	10	15	20	25	32
Min. operating pressure (MPa)	0.15	0.1		0.05		

CXS Series

With end lock

After tightening, make sure there is no problem when it is operated in min. operation pressure (See below) and confirm the lock on the return side.

Bore size (mm)	6	10	15	20	25	32
Min. operating pressure (MPa)	0.3					

1. Disassembly of the Cylinder

1-1. Disassemble and assemble the cylinder in a clean area.
1-2. Refer to the “Replacement Procedure of the Lock Unit” (CLG-1) ① to ③ for disassembly.

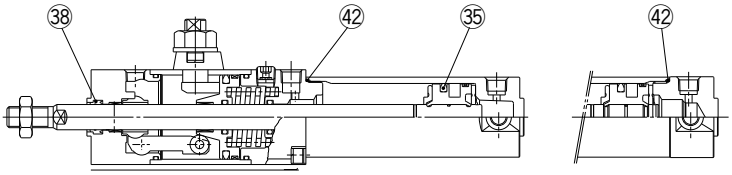

Long stroke

㊳Rod seal A
㉟Piston seal
㊷Cylinder tube gasket

2. Removal of the Seal

㊳ Rod seal A: Insert a watchmaker’s screwdriver to pull out the seal.
Take care not to damage the seal groove of the cover. (Fig. 1)
㉟ Piston seal: Remove the piston seal. (Fig. 2)
㊷ Cylinder tube gasket: Insert a watchmaker’s screwdriver to pull out the seal.

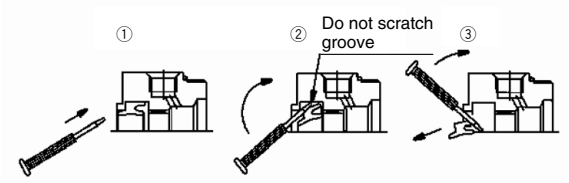

Fig. 1 Removal of the rod seal

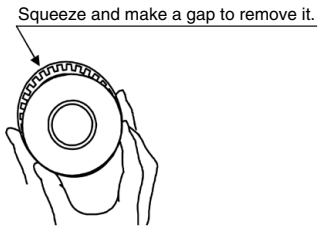

Fig. 2 Removal of the piston seal

3. Application of Grease to the Seal

3-1. Apply grease slightly to the outer circumference of each seal.
3-2. Fill in the groove of the rod seal with grease.

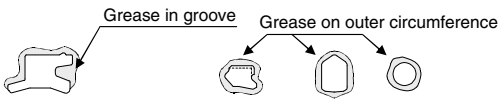

Fig. 3 Grease to the seals

4. Mounting of the Seal

㊳ Rod seal A: Mount the seal in the correct direction.
㉟ Piston seal: Mount the seal while stretching it as Fig. 5.

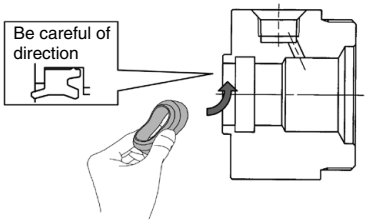

Fig. 4 Installation of the rod seal

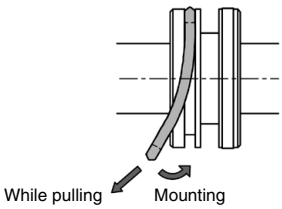

Fig. 5 Installation of the piston seal

5. Application of Grease

㊳ Rod seal B: Apply grease to the seal and the inner circumference of the bushing. (Fig. 6)
Use a precision screwdriver to apply grease to the small bore diameter while making sure not to leave scratches.

㉟ Piston seal: Rub grease into the seal groove and outer circumference of the seal. (Fig. 7)

㊷ Cylinder tube gasket: Lightly apply grease.

• Cylinder component parts: Apply grease to each component parts of the cylinder in Fig. 9.
Appendix table shows the grease amount required for a cylinder with a 100 mm stroke.
For your reference, amount taken with a forefinger is about 3 g. (Fig. 8)

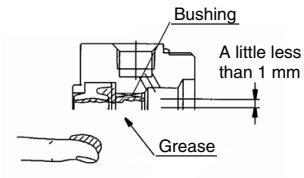

Fig. 6 Rod seal

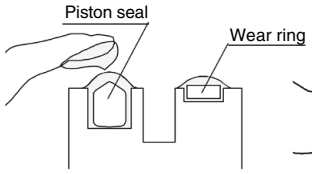

Fig. 7 Piston seal

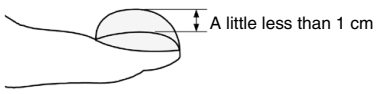

Fig. 8 Grease amount

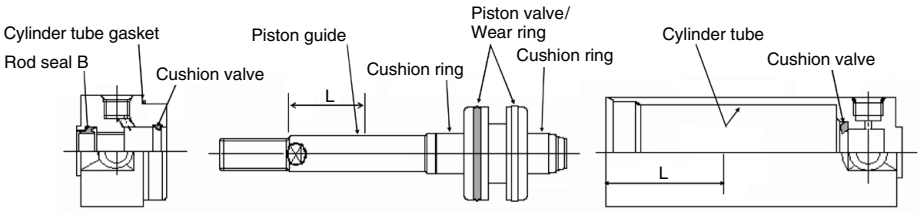

Fig. 9 Grease application points $L = \frac{\text{STROKE}}{2}$ or 100 mm and more

Table 1 Grease application amount (g)

Stroke	Bore size			
	20	**25**	**32**	**40**
100 stroke	2	3	3	3 to 4
Additional 50 stroke	0.5	0.5	0.5	1

6. Reassembly of the Cylinder

6-1. Make sure no particles are present. Do not scratch the seals.

6-2. Tighten the cover approx. 0-2 degrees more from the original position (where the ports of rod and head covers match).

6-3. After completing the assembly, manually check whether the movement is smooth.

7. Replacement Parts

7-1. For the CLG1 series, the lock-up unit (except the long-stroke lock-up) and the seals (rod seal B, piston seal, cylinder tube gasket) can be replaced.

8. Replacement Procedure of the Lock Unit

⚠Caution

The lock unit for the CLG1 series can be replaced.
(However, please note that lock units cannot be replaced in the case of long stroke specifications.)

8-1. Release the manual lock.
a. Loose the locking nut.
b. Supply air pressure of 0.3 MPa or more to the lock release port.
c. Turn the wrench flats section of the manual unlocking cam until it stop at the FREE position that is marked on the cam guide.
d. While keeping the wrench flats section in place, tighten the lock nut.

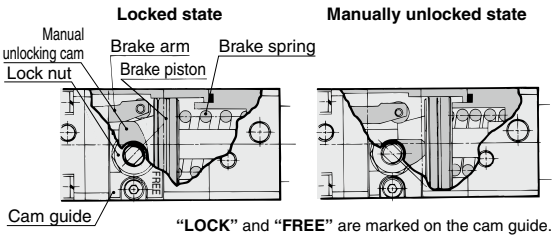

"LOCK" and **"FREE"** are marked on the cam guide.

8-2. Remove the lock unit by securing the square section of the rod cover or the wrench flats of the tube cover in an apparatus such as a vice, and then loosening the other end with a wrench or adjustable angle wrench, etc.
See the table below for the dimensions of the square section and the wrench flats.

Bore size (mm)	**Rod cover square section** (mm)	**Tube cover wrench flats** (mm)
20	38	24
25	45	29
32	45	35.5
40	52	44

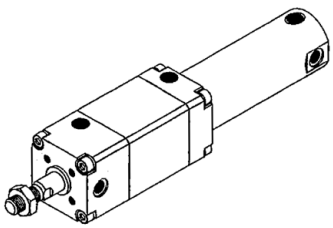

8-3. Remove the tube cover.

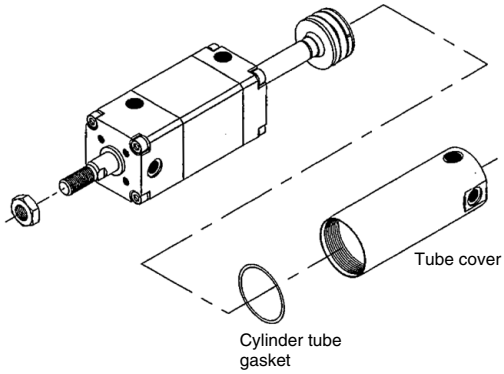

8-4. Pull out the piston rod assembly.

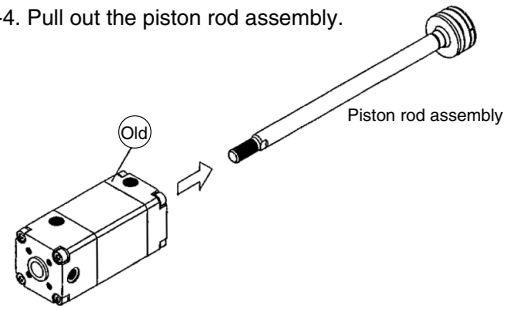

8-5. Replace the temporary axis of a new lock unit with the piston rod assembly.

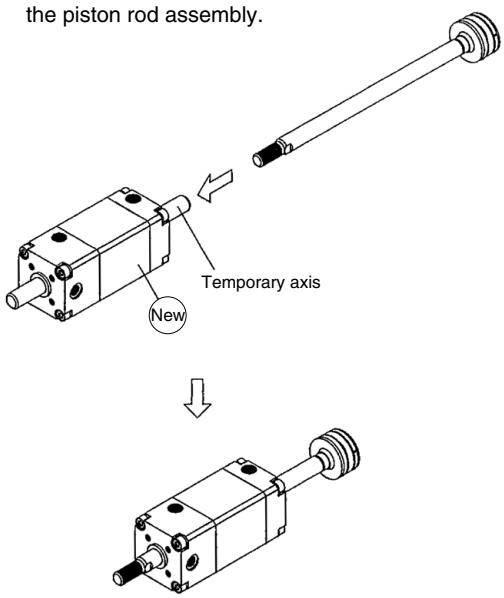

Note) When replacing the piston rod assembly with a new lock unit, care should be taken not to cut rod seal B with threads or wrench flats.
Lock the manual unlocking cam before use.

8-6. Reassemble by reversing the procedure in steps 8-1. and 8-3. When retightening the sections, turn approx. 2˚ past their position prior to disassembly.

1. Disassembly of the Cylinder

Disassemble and assemble the cylinder in a clean area.

1-1. Loosen the tie-rod nuts and pull out the 4 tie-rods.

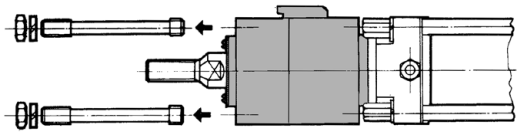

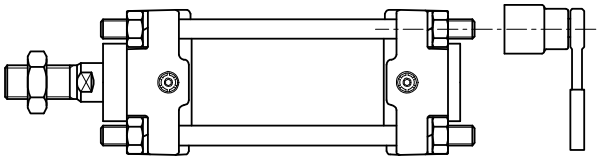

1-2. Open the rubber cap and screw in the unlocking bolt, which is provided as an accessory part. At this time, apply air pressure of 0.2 MPa to 0.3 MPa to disengage the lock and insert the bolt. (The operation to follow can be performed properly and easily with the application of air pressure.) After verifying that the bolt has been inserted properly, pull out the unit from the rod.

Table 1 Work tools

Bore size (mm)	**Applicable socket**
40, 50	13 (M8)
63	17 (M10)
80, 100	19 (M12)

2. Removal of the Seal

2-1. Rod seal
Insert a watchmaker's screwdriver to pull out the seal.
Take care not to damage the seal groove of the cover. (Fig. 1)

2-2. Piston seal
Remove it as in Fig. 2.

2-3. Tube gasket
Remove it in the same way as Fig. 2.

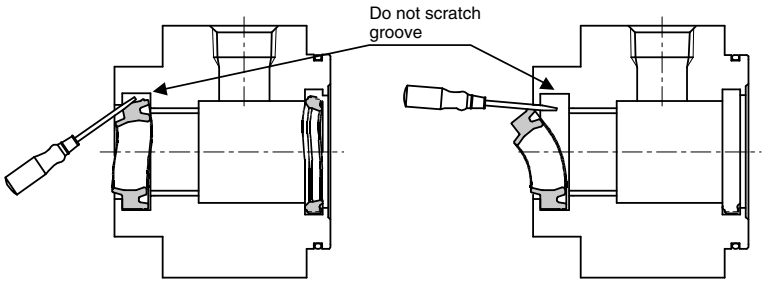

Fig. 1 Removal of the rod seal

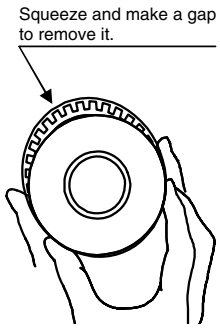

Fig. 2 Removal of the piston seal

3. Application of Grease to the Seal

3-1. Apply grease slightly to the outer circumference of each seal.

3-2. Fill in the groove of the rod seal with grease.

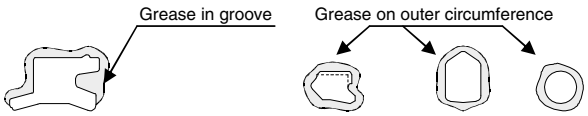

Fig. 3 Grease to the seals

4. Mounting of the Seal

4-1. Rod seal
Mount the seal in the correct direction by bending the seal with fingers as Fig. 4.
4-2. Piston seal
Mount the seal while stretching it as in Fig. 5.

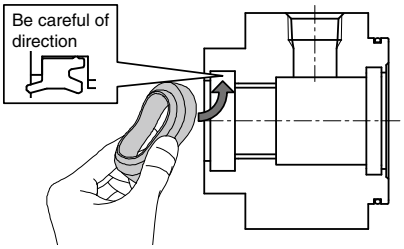

Fig. 4 Installation of the rod seal

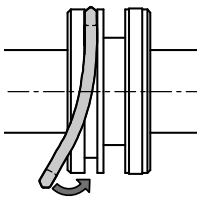

Fig. 5 Installation of the piston seal

5. Application of Grease

5-1. Rod seal
Apply grease to the seal and the inner circumference of the bushing. (Fig. 6)
5-2. Piston seal
Rub grease into the seal groove and outer circumference of the seal. (Fig. 7)
5-3. Cylinder component parts
Apply grease to each component parts of the cylinder in Fig. 9. Appendix table shows the grease amount required for a cylinder with a 100 mm stroke. For your reference, amount taken with a forefinger is about 3 g. (Fig. 8)

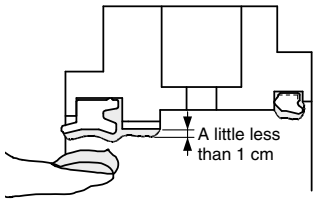

Fig. 6 Rod seal
Cushion seal

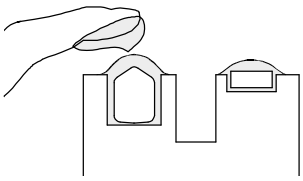

Fig. 7 Piston seal

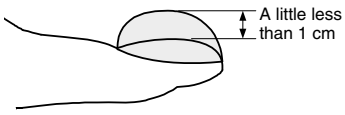

Fig. 8 Grease amount

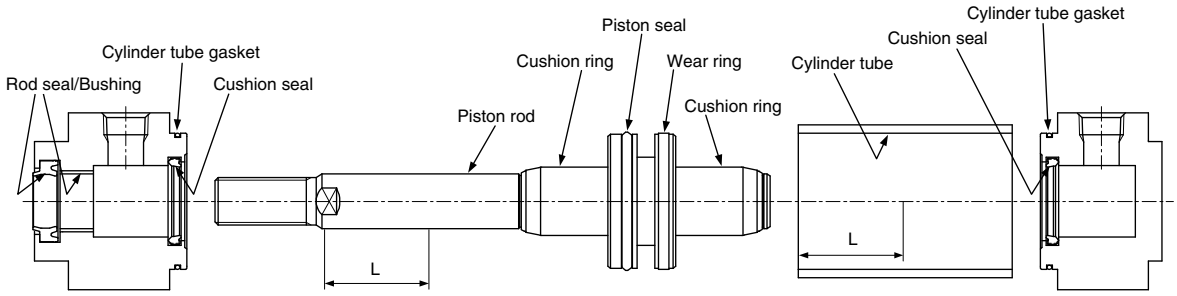

Fig. 9 Grease application points

$L = \frac{\text{STROKE}}{2}$ or 100 mm and more

Table. 2 Grease application amount (g)

Stroke	Bore size						
	32	40	50	63	80	100	125
100 stroke	3 to 4	3 to 4	3 to 5	4 to 5	6 to 8	8 to 10	15 to 17
Additional 50 stroke	1	1	1	1.5	1.5	2	3

6. Reassembly of the Cylinder

6-1. Make sure no particles are present. Do not scratch the seals.
6-2. To assemble the tie-rod to the cylinder, tighten the tie-rod to the shorter screw side by hand.
6-3. Set the tie-rod nuts from the head cover side. Tighten the tie-rod nut so that the tensile force is even.
Refer to the appropriate tightening torque of Table 3.
Brackets refer to the same table.

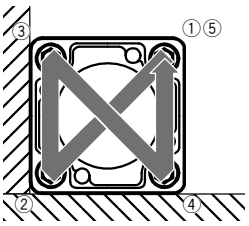

Fig. 10 Tie-rod tightening order

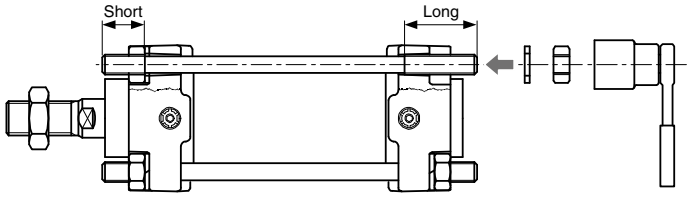

Table 3 Appropriate tightening torque

Bore size (mm)	**Appropriate tightening torque** (N·m)
40, 50	10.8
63	24.5
80, 100	38.2

6-4. Install the 4 tie-rods, with their shorter threaded portion oriented towards the rod cover, and tighten them with uniform torque. Until the installation and adjustment have been completed, never pull out the unlocking bolt (or release the air pressure).

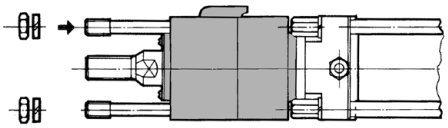

1. Disassembly

1-1. Disassembly should be done in a wide space containing little dust.

1-2. After removing the cylinder, be sure to protect the end of piping port and rubber hose on the machine side with a clean cloth to prevent dust from entering.

1-3. Disassemble the unit with care to prevent damage to the sliding portion.

1-4. Check the double chamfered portion at the rod end for burrs to prevent damage to the seal and the bushing when removing the lock-up unit from the piston rod. If burrs are found, remove them with a "file."

1-5. Loosen the tie-rod nuts and pull out the 4 tie-rods.

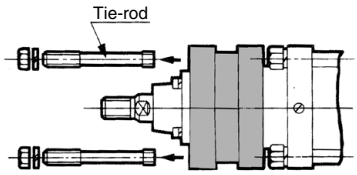

1-6. Apply air pressure of 0.2 MPa to 0.3 MPa to disengage the lock and pull out the lock-up unit from the piston rod.

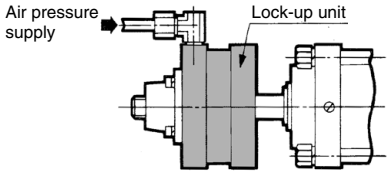

1-7. Loose either of nuts for head side tie-rod with "ratchet handle for socket wrench", "T-type slide handle for socket wrench" or "spinner handle for socket wrench," etc. and remove it from the tie-rod. Please refer to the table for "socket for socket wrench."

Bore size (mm)	Nut	Applicable socket
125, 140	Class1, M14 x 1.5	JISB4636 Dodecagon22
160	Class1, M16 x 1.5	JISB4636 Dodecagon24

1-8. Remove the 4 tie-rods from cover.

1-9. Remove the push plate (rod cover) from the piston rod with care to prevent damage to the seal and bushing.

1-10. Pull the piston rod and pull out the piston from the cylinder tube.

1-11. Remove the cylinder tube from the head cover.

1-12. Disassembly of the rod cover (For the head cover, it should also be in accordance with this procedure.)

a. Remove the cylinder tube gasket. When excessive deformation or cut is found with the gasket, replace it.

b. Remove the cushion valve from the cover by using "flat head screwdriver."
(Tool: A screwdriver, Nominal size 8 x 150, Normal type, Normal class)

c. Remove the cushion valve seal from the cushion valve with a cloth.

d. Loosen the hexagon socket head cap screw for push plate with a "hexagon wrench" and remove the push plate. Applicable "Hexagon wrenches" are shown in the table below.

Bore size (mm)	Hexagon socket head cap screw	Nominal size of wrench
125, 140, 160	M8 x 1.25 x 25L	6

e. Remove the wiper ring. If it cannot be removed by hand, use a small "flat head screwdriver" and remove it with care to prevent damage to it.

f. Remove the rod seal with a small "flat head screwdriver" with care to prevent damage to it.

g. Remove the push plate gasket.

h. Since the cushion seal is pressed fit, air will leak from the portion where the cushion seal is pressed fit due to damage or change in pressing force. Therefore when the cushion seal should be replaced, the rod cover assembly and the head cover assembly should be replaced. (Rod and head covers are not replaceable for type 2 pressure containers. Please consult with SMC for more detail.)

i. Since the bushing is pressed fit into push plate, it is difficult to remove structurally and even if it is removed, stock for press fit lowers when it is pressed fit again. Therefore when it is replaced, replace the push plate assembly.

2. Replacement of the Seal

2-1. Removal of the seal
Please refer to “1. Disassembly” for dismantling of wiper ring, rod seal, valve seal, tube gasket and push plate gasket.
Since the piston seal has a deep groove for sealing, use your hand (not a watchmaker’s screwdriver) and push from one side of seal and pull it out when it lifts off.

2-2. Application of grease
a. Seals: Apply thin coat of grease.
b. Cylinder component
Apply grease to the individual components as the figure below. The table shows the grease amount required for a cylinder with a 100 mm stroke.

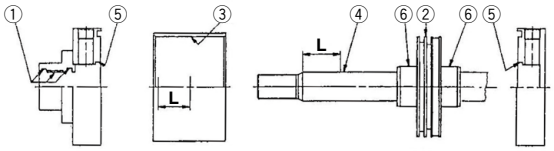

Grease application amount (g)

Bore size (mm)	125	140	160	Portion to apply
100 stroke	15 to 17	20 to 22	24 to 26	① to ⑥
Additional 50 stroke	3	3	3	③④

For grease, use lithium soap group grease JIS #2

2-3. Mounting of the seal
a. Wiper ring/Rod seal
Mount in the correct direction.
b. Seals other than wiper ring
After mounting the seals, apply grease on the inside diameter surfaces of the bushing (rubbing grease into surface).

3. Assembly

3-1. Before assembling cylinder, be sure to clean each part to remove dust.

3-2. Before assembling, apply enough grease to the rod, bushing, tube and seal.

3-3. For rusty part, remove the rust completely.

3-4. Assembly should be done in a clean area with care to prevent foreign objects from entering.

3-5. Mount the seal with care to prevent damage to it.

3-6. Insert the piston into the tube or the rod into the bushing with care to prevent damage to each seal.

3-7. Tighten the tie-rod and bolt with the appropriate torque shown in the table below.

Tightening torque (N·m)

Bore size (mm)		125	140	160
Tie-rod	Steel tube	49		75.5
	Aluminum tube	39.2		62.8
Push plate bolt		11		

3-8. Insert the lock-up unit to the piston rod while the lock is released with the air pressure of 0.2 to 0.3 MPa, Install the 4 tie-rods, with their shorter threaded portion oriented towards the rod cover, and tighten them with uniform torque.
Maintain the application of air pressure until the installation and adjustment have been completed, and never actuate the lock in the meantime.

1. Disassembly of the Cylinder

1-1. Disassemble and assemble the cylinder in a clean area.
1-2. Refer to the “Replacement Procedure of the Lock Unit” (CNG-3) ① to ③ for disassembly.

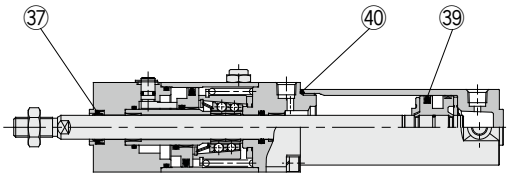

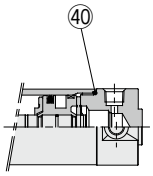

Long stroke

㊲Rod seal A
㊴Piston seal
㊵Cylinder tube gasket

2. Removal of the Seal

㊲ Rod seal A: Insert a watchmaker’s screwdriver to pull out the seal.
Take care not to damage the seal groove of the cover. (Fig. 1)
㊳ Piston seal: Remove the piston seal. (Fig. 2)
㊵ Cylinder tube gasket: Insert a watchmaker’s screwdriver to pull out the seal.

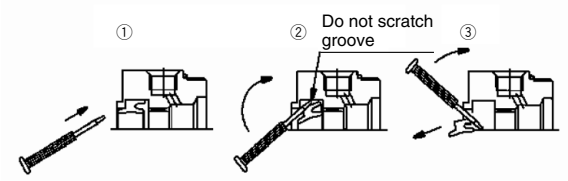

Fig. 1 Removal of the rod seal

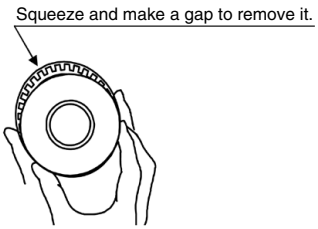

Fig. 2 Removal of the piston seal

3. Application of Grease to the Seal

3-1. Apply grease slightly to the outer circumference of each seal.
3-2. Fill in the groove of the rod seal with grease.

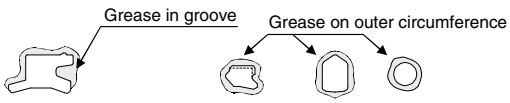

Fig. 3 Grease to the seals

4. Mounting of the Seal

㊲ Rod seal A: Mount the seal in the correct direction.
㊴ Piston seal: Mount the seal while stretching it as Fig. 5.

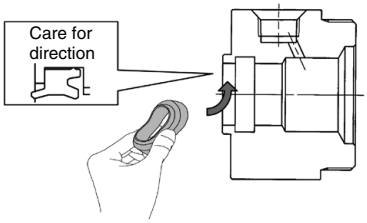

Fig. 4 Installation of the rod seal

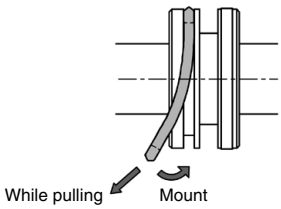

Fig. 5 Installation of the piston seal

5. Application of Grease

㊲ Rod seal A: Apply grease to the seal and the inner circumference of the bushing. (Fig. 6)
Use a precision screwdriver to apply grease to the small bore diameter while making sure not to leave scratches.

㊴ Piston seal: Rub grease into the seal groove and outer circumference of the seal. (Fig. 7)

㊵ Cylinder tube gasket: Lightly apply grease.

• Cylinder component parts: Apply grease to each component parts of the cylinder in Fig. 9.
Appendix table shows the grease amount required for a cylinder with a 100 mm stroke.
For your reference, amount taken with a forefinger is about 3 g. (Fig. 8)

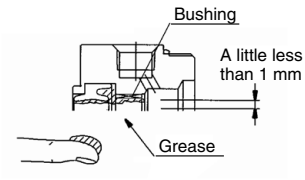

Fig. 6 Rod seal

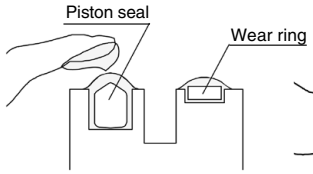

Fig. 7 Piston seal

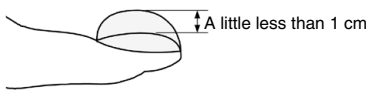

Fig. 8 Grease amount

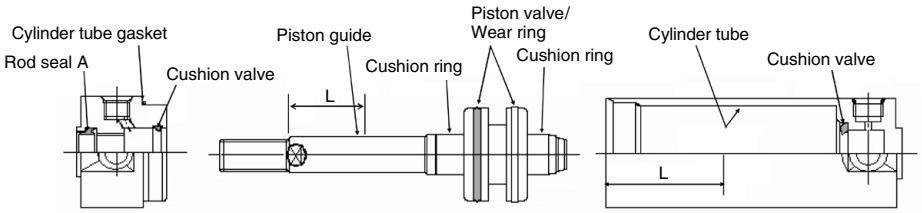

Fig. 9 Grease application points $L = \frac{\text{STROKE}}{2}$ or 100 mm and more

Grease application amount (g)

Stroke	Bore size			
	20	**25**	**32**	**40**
100 stroke	2	3	3	3 to 4
Additional 50 stroke	0.5	0.5	0.5	1

6. Reassembly of the Cylinder

6-1. Make sure no particles are present. Do not scratch the seals.

6-2. Tighten the cover approx. 0-2 degrees more from the original position (where the ports of rod and head covers match).

6-3. After completing the assembly, manually check whether the movement is smooth.

7. Replacement Parts

7-1. For the CNG series, the lock-up unit (except the long-stroke) and the seal (rod seal B, piston seal, cylinder tube gasket) can be replaced.

8. Replacement of the Lock Unit

⚠Caution

The lock unit for the CNG series can be replaced.
(However, please note that lock units cannot be replaced in the case of long stroke specifications.)

8-1. Remove the lock unit by securing the square section of the rod cover or the wrench flats of the tube cover in an apparatus such as a vice, and then loosening the other end with a wrench or adjustable angle wrench, etc.
See the table below for the dimensions of the square section and the wrench flats.

Bore size (mm)	**Rod cover square section** (mm)	**Tube cover wrench flats** (mm)
20	38	24
25	45	29
32	45	35.5
40	52	44

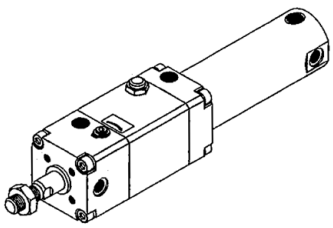

8-2. Remove the tube cover.

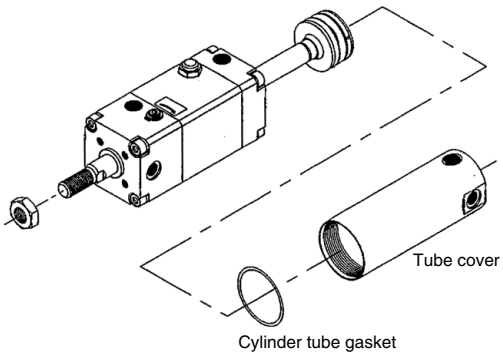

8-3. Apply compressed air of 0.3 MPa or more to the unlocking port, and pull out the piston rod assembly.

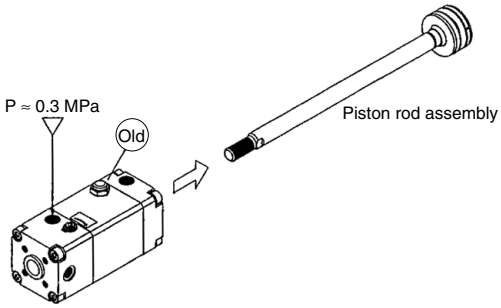

8-4. Similarly apply compressed air of 0.3 MPa or more to the unlocking port of the new lock unit, and replace the temporary axis with the previous piston rod assembly.

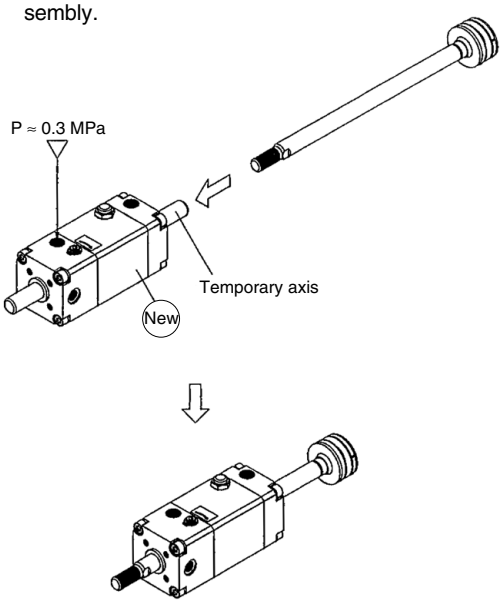

Note) When replacing the piston rod assembly with a new lock unit, care should be taken not to cut rod seal B with threads or wrench flats.
Be sure to keep applying compressed air with a pressure of at least 0.3 MPa to the lock releasing port when replacing the temporary axis of a new lock unit with the piston rod assembly.
If the compressed air applied to the lock releasing port is released (when it is in the lock condition) while the temporary rod and the piston rod assembly are removed from the lock unit, the brake shoe will be deformed and it will become impossible to insert the piston rod assembly, which will make the lock unit impossible to use.

8-5. Reassemble by reversing the procedure in steps 8-1. and 8-2. When retightening the sections, turn approx. 2˚ past their position prior to disassembly.

1. Disassembly of the Cylinder

Disassemble and assemble the cylinder in a clean area.

MNB Series

How to Replace Lock Units ②
(MWB: Page 458, MNB: Page 459) Refer to a to c.

Table 1 Work tools (MNB)

Bore size (mm)	Width across flats of a hexagon wrench	
	When removing the support bracket	When removing the tie-rod nut
32, 40	4	6
50, 63	5	8
80, 100	6	10
125	8	12

CNA2 Series

How to Replace Lock Units ② (Page 460)
Refer to a to c.

Table 2 Work tools

Bore size (mm)	Applicable socket
40, 50	13 (M8)
63	17 (M10)
80, 100	19 (M12)

2. Removal of the Seal

2-1. Rod seal, cushion seal
Insert a watchmaker's screwdriver to pull out the seal.
Take care not to damage the seal groove of the cover. (Fig. 1)

2-2. Piston seal
Remove it as in Fig. 2.

2-3. Tube gasket
Remove it in the same way as Fig. 2.

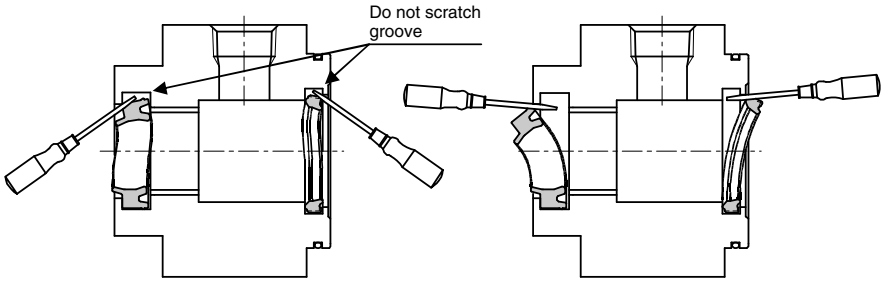

Fig. 1 Removal of the rod seal, cushion seal

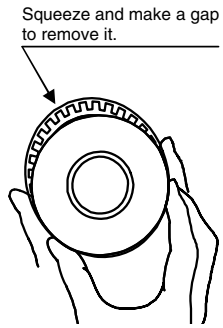

Fig. 2 Removal of the piston seal

3. Application of Grease to the Seal

3-1. Apply grease slightly to the outer circumference of each seal.
3-2. Fill in the groove of the rod seal with grease.

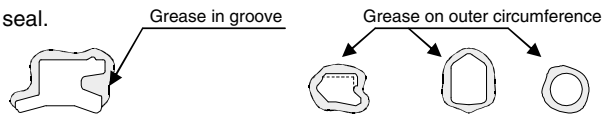

Fig. 3 Grease to the seals

4. Mounting of the Seal

4-1. Rod seal, cushion seal
Mount the seal in the correct direction by bending the seal with fingers as Fig. 4.

4-2. Piston seal
Mount the seal while stretching it as in Fig. 5.

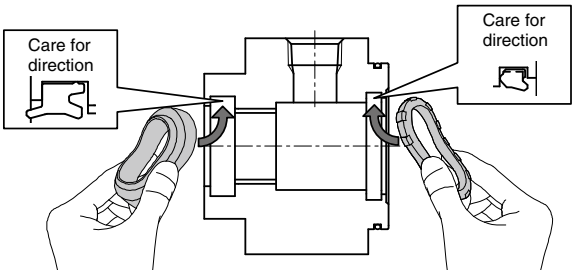

Fig. 4 Installation of the rod seal, cushion seal

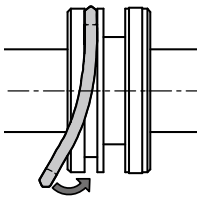

Fig. 5 Installation of the piston seal

5. Application of Grease

5-1. Rod seal, cushion seal
Apply grease to the seal and the inner circumference of the bushing. (Fig. 6)

5-2. Piston seal
Rub grease into the seal groove and outer circumference of the seal. (Fig. 7)

5-3. Cylinder component parts
Apply grease to each component parts of the cylinder in Fig. 9. Appendix table shows the grease amount required for a cylinder with a 100 mm stroke. For your reference, amount taken with a forefinger is about 3 g. (Fig. 8)

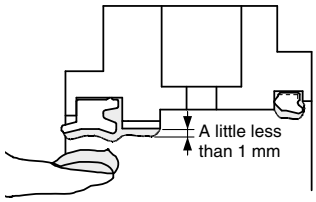

Fig. 6 Rod seal Cushion seal

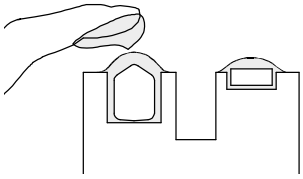

Fig. 7 Piston seal

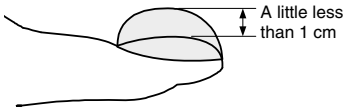

Fig. 8 Grease amount

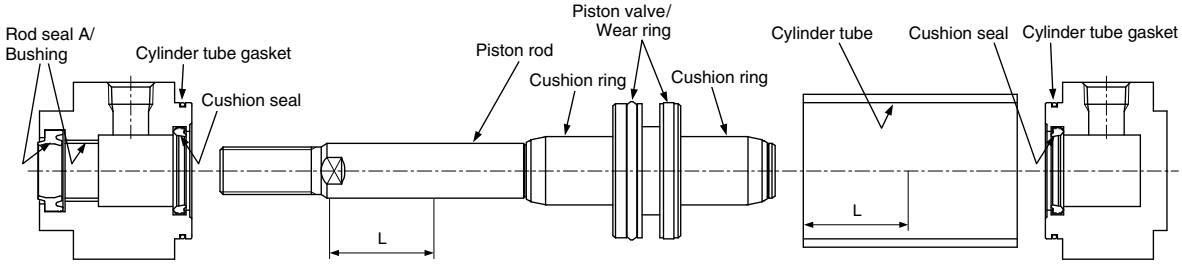

Fig. 9 Grease application points

$L = \frac{\text{Stroke}}{2}$ or 100 mm and more

Grease application amount (g)

Stroke	Bore size						
	32	40	50	63	80	100	125
100 stroke	3 to 4	3 to 4	3 to 5	4 to 5	6 to 8	8 to 10	15 to 17
Additional 50 stroke	1	1	1	1.5	1.5	2	3

6. Reassembly of the Cylinder

6-1. Make sure no particles are present. Do not scratch the seals.

6-2. For details on lock unit replacement, refer to the pages below.
- MWB (Page 458)
- MNB (Page 459)
- CNA2 (Page 460)

6-3. To assemble the tie-rod to the cylinder, tighten the tie-rod to the shorter screw side by hand from the head cover side.

6-4. Set the tie-rod nuts. Tighten the tie-rod nut so that the tensile force is even.
Refer to the appropriate tightening torque of Table 4 and 5.
As for mounting brackets, refer to the same table.

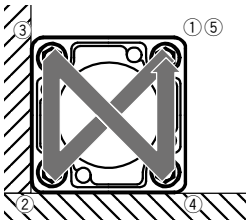

Fig. 10 Tie-rod tightening order

MWB/MNB Series

Table 4 Appropriate tightening torque

Bore size (mm)	**Appropriate tightening torque** (N·m)
32, 40	5.1
50, 63	11.0
80, 100	25.0

CNA2 Series

Table 5 Appropriate tightening torque

Bore size (mm)	**Appropriate tightening torque** (N·m)
40, 50	7.4
63	20
80, 100	29

7. Replacement Procedure of the Lock Unit

MWB Series

⚠Warning

Although the lock unit for the MWB series can be replaced, do not disassemble the lock unit.

1. The lock unit for the MWB series can be replaced.
2. How to replace the lock unit
   1) To release the lock state, screw-in the lock release bolt to the body cap end or pressurize the lock release port with 0.3 MPa or more.

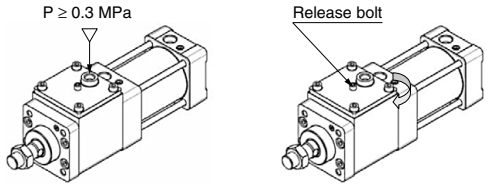

a) Lock released by air pressure b) Manual lock release

   2) Remove the lock unit holding bolt (hexagon socket head cap screw) on the rod side of the cylinder with hexagon wrench. Refer to the table below for the hexagon wrench.
   If using the rod end nut, please remove it.

Bore size (mm)	Hexagon wrench size of the lock holding bolt
32	3
40·50	5
63	6
80	8
100	10

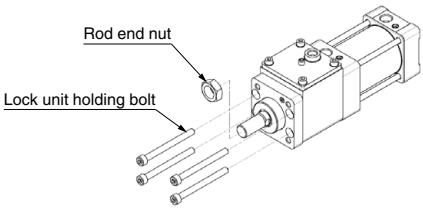

   3) Pull out the old lock unit from the cylinder.

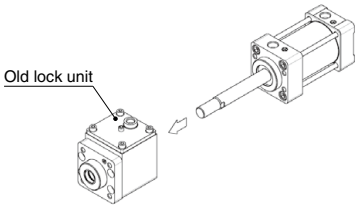

   4) Insert a new lock unit into the cylinder. The lock unit for maintenance is supplied with lock released state at the shipment from the factory.

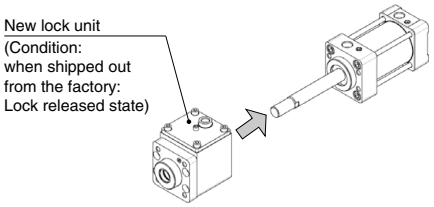

   5) Insert the lock unit holding bolt and tighten it temporarily. Check that the piston rod operates smoothly by hand while maintaining the lock release state.

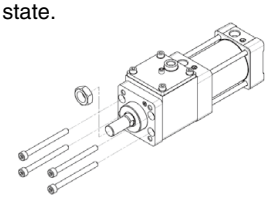

   6) Confirm that the operation of 5) is performed correctly, and then tighten the lock unit holding bolt with the appropriate tightening torque as shown in the table below.

Tube I. D. (mm)	Appropriate tightening torque of the lock unit holding bolt (N·m)
32	1.35 to 1.65
40·50	4.7 to 5.7
63	11.3 to 13.7
80	22.1 to 26.9
100	37.8 to 46.2

   7) After assembly is completed, rotate the release bolt counterclockwise by hand with a hexagon wrench until resistance is felt. Once that position is reached, rotate it for an additional 1/6th of a turn to securely tighten the release bolt.
   ∗ Please do not use an electric driver or pneumatic driver.

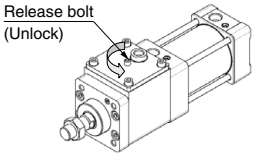

Check that the cylinder is locked and confirm that the lock is released when air pressure of 0.3 MPa or more is applied to the lock unit release port. In addition to this, the piston rod should operate smoothly with the min. operating pressure.
Check that there is no air leakage from the release bolt.

MNB Series

⚠ Warning

Although the lock unit for the MNB series can be replaced, do not disassemble the lock unit.

1. The lock unit for the MNB series can be replaced.
2. How to replace the lock unit
   a. Loosen the cylinder head cover tie-rod nuts (four) with a hexagon wrench. Refer to the table below for applicable.

Bore size (mm)	Width across flats of a hexagon wrench
32, 40	6
50, 63	8
80, 100	10

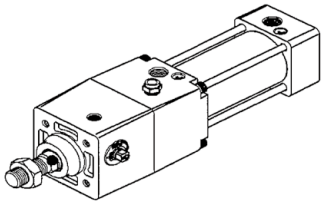

b. Remove the tie-rods, head cover and cylinder tube.

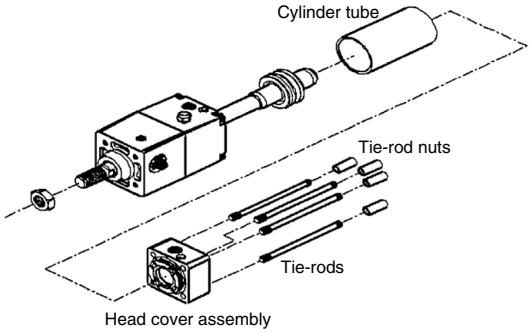

c. Apply 0.3 MPa or more of pressure to the lock release port to pull out the piston rod assembly.

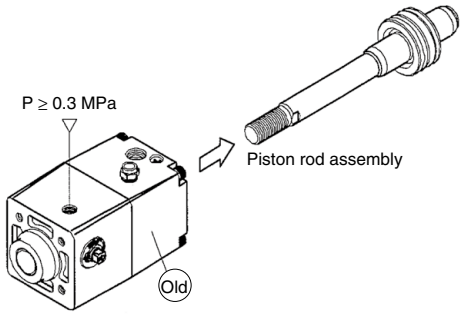

d. Apply 0.3 MPa or more of pressure to new lock unit lock release port to change the piston rod assembly to the tentative rod.

Note1) Attention should be taken not to cut rod seal B with screws and the wrench flat when replacing the piston rod assembly to new lock unit.

Note2) Be sure to keep applying compressed air with a pressure of at least 0.3 MPa to the lock releasing port when replacing the temporary axis of a new lock unit with the piston rod assembly.
If the compressed air applied to the lock releasing port is released (when it is in the lock condition) while the temporary rod and the piston rod assembly are removed from the lock unit, the brake shoe will be deformed and it will become impossible to insert the piston rod assembly, which will make the lock unit impossible to use.

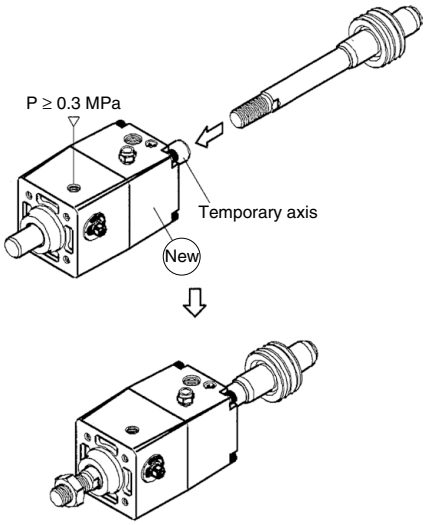

e. Reassemble in reverse order from b to a.

⚠ Caution

Do not apply grease nor oil to the piston rod surface.

CNA2 Series

1. The lock unit for the CNA2 series can be replaced.
2. How to replace the lock unit
   a. Loosen the tie-rod nuts (4 pieces) on the cylinder head cover side with a socket wrench.
   For applicable socket, refer to the below table.

Bore size (mm)	Nut mounting bracket		
	Nut	Width across flats dimension	Socket
40, 50	JISB1181 Class 2 M8 x 1.25	13	JISB4636 + 2-point angle socket 13
63	JISB1181 Class 2 M10 x 1.25	17	JISB4636 + 2-point angle socket 17
80, 100	JISB1181 Class 2 M12 x 1.75	19	JISB4636 + 2-point angle socket 19

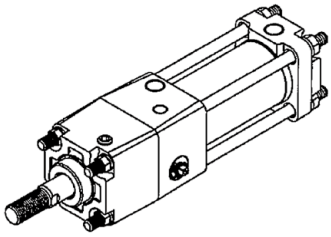

b. Remove the tie-rods, head cover and cylinder tube.

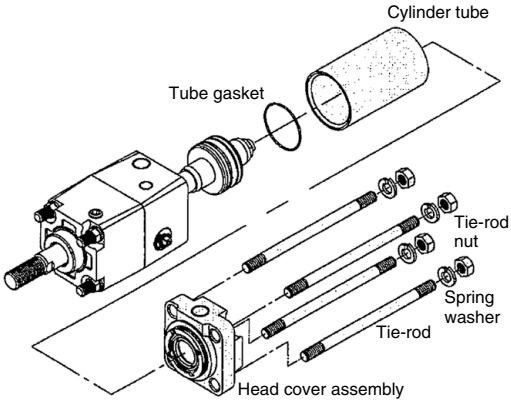

c. Apply 0.3 MPa or more of compressed air to the unlocking port, and pull out the piston rod assembly.

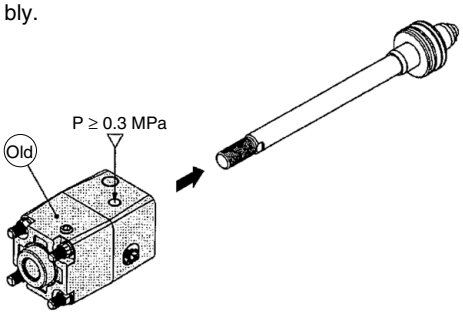

d. Similarly, apply 0.3 MPa or more of compressed air to the unlocking port of the new lock unit, and replace the new lock unit's temporary axis with the previous piston rod assembly.

Note1) Attention should be taken not to cut rod seal B with screws and the wrench flat when replacing the piston rod assembly to new lock unit.

Note2) Be sure to keep applying compressed air with a pressure of at least 0.3 MPa to the lock releasing port when replacing the temporary axis of a new lock unit with the piston rod assembly.
If the compressed air applied to the lock releasing port is released (when it is in the lock condition) while the temporary rod and the piston rod assembly are removed from the lock unit, the brake shoe will be deformed and it will become impossible to insert the piston rod assembly, which will make the lock unit impossible to use.

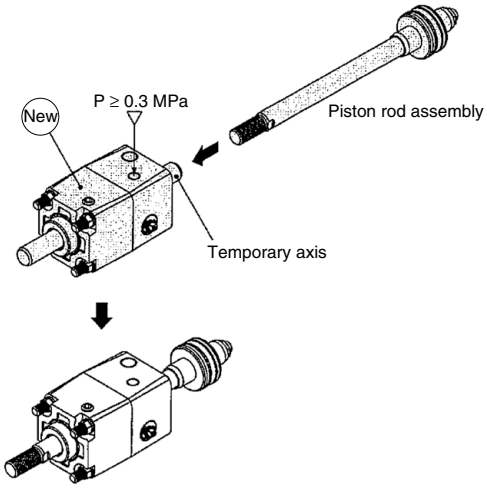

e. Reassemble in reverse order from step b to a.

⚠ Caution

Do not apply grease nor oil to the piston rod surface.

1. Disassembly

1-1. Disassembly should be done in a wide space containing little dust.

1-2. After removing the cylinder, be sure to protect the end of piping port and rubber hose on the machine side with a clean cloth to prevent dust from entering.

1-3. Disassemble the unit with care to prevent damage to the sliding portion.

1-4. Check the double chamfered portion at the rod end for burrs to prevent damage to the seal and the bushing when removing the lock unit from the piston rod. If burrs are found, remove them with a "file."

1-5. Remove the lock unit according to section 4, Replacing Procedures of Lock Unit.

1-6. Loose either of nuts for head side tie-rod with "ratchet handle for socket wrench", "T-type slide handle for socket wrench" or "spinner handle for socket wrench", etc. and remove it from the tie-rod. Refer to the table for "socket for socket wrench."

Bore size (mm)	Nut	Applicable socket
125, 140	Class1, M14 x 1.5	JISB4636 Dodecagon22
160	Class1, M16 x 1.5	JISB4636 Dodecagon24

1-7. Remove the 4 tie-rods from the cover.

1-8. Remove the rod cover from the piston rod with care to prevent damage to the seal and bushing.

1-9. Pull the piston rod and pull out the piston from the cylinder tube.

1-10. Remove the cylinder tube from the head cover.
Remove the wiper ring of the lock unit. If it cannot be removed by hand, use a small "flat head screwdriver" and remove it with care to prevent damage to it.

1-11. Disassembly of the rod cover (For the head cover, it should also be in accordance with this procedure.)

a. Remove the cylinder tube gasket. When excessive deformation or cut is found with the gasket, replace it.

b. Remove the cushion valve from the cover with a "flat head screwdriver."
(Tool: A screwdriver, Nominal size 8 x 150, Normal type, Normal class)

c. Remove the cushion valve seal from the cushion valve with a cloth.

d. Loosen the hexagon socket head cap screw for push plate B with a "hexagon wrench" and remove the push plate D. Applicable "Hexagon wrenches" are shown in the table below.

e. Remove the rod seal with a small "flat head screwdriver" with care to prevent damage to it.

f. Remove the push plate gasket.

Bore size (mm)	Hexagon socket head cap screw	Nominal size of wrench
125, 140, 160	M8 x 1.25 x 25L	6

g. Since the cushion seal is pressed fit, air will leak from the portion where the cushion seal is pressed fit due to damage or change in pressing force. Therefore when the cushion seal should be replaced, the rod cover assembly and the head cover assembly should be replaced.

2. Replacement Procedure of the Seal

2-1. Removal of the seal
Please refer to "1. Disassembly" for dismantling of wiper ring, rod seal, valve seal, tube gasket and push plate gasket.
Since piston seal has a deep groove for sealing, use your hand (not a watchmaker's screwdriver) and push from one side of the seal and pull it out when it lifts off.

2-2. Application of grease

a. Seals: Apply thin coat of grease.

b. Cylinder component
Apply grease to the individual components as the figure below. The table shows the grease amount required for a cylinder with a 100 mm stroke.

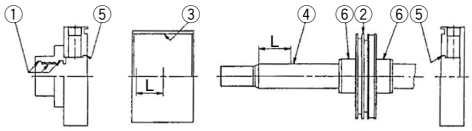

Grease application amount (g)

Bore size (mm)	125	140	160	Portion to apply
100 stroke	15 to 17	20 to 22	24 to 26	① to ⑥
Additional 50 stroke	3	3	3	③④

For grease, use lithium soap group grease JIS #2.

2-3. Mounting of the seal

a. Wiper ring/Rod seal
Mount in the correct direction.

b. Seals other than the wiper ring
After mounting the seals, apply grease on the inside diameter surfaces of the bushing (rubbing grease into surface).

3. Assembly

3-1. Before assembling cylinder, be sure to clean each part to remove dust.
3-2. Before assembly, apply enough grease to the rod, bushing, tube and seal.
3-3. For rusty part, remove the rust completely.
3-4. Assembly should be done in a clean area with care to prevent foreign objects from entering.
3-5. Mount seal with care to prevent damage to it.
3-6. Insert the piston into the tube or the rod into the bushing with care to prevent damage to each seal.
3-7. Tighten the tie-rod and bolt with the appropriate torque shown in the table below.

Tightening torque (N·m)

Bore size (mm)		125	140	160
Tie-rod	Steel tube	49		75.5
	Aluminum tube	39.2		62.8
Push plate bolt		11		

4. Replacement Procedure of the Lock Unit

4-1. The lock unit for the CNS series can be replaced.
4-2. Replacing procedures of lock unit
a. Loosen the tie-rod nuts (4 pieces) on the rod cover side of cylinder with a socket wrench.

Bore size (mm)	Nut	Dimension of width across flats	Socket
125, 140	JIS B1181 M14 x 1.5	22	JIS B4636 Socket22
160	JIS B1181 M16 x 1.5	24	JIS B4636 Socket24

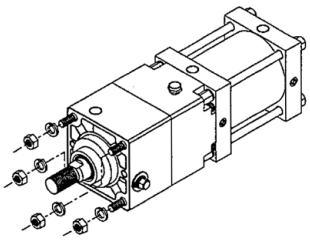

b. Remove the lock unit by applying compressed air over 0.3 MPa to lock release port.

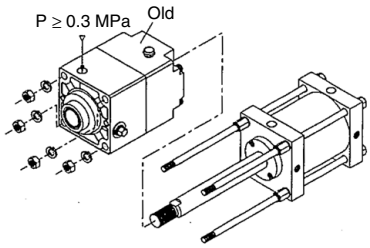

c. Also apply compressed air over 0.3 MPa to a new lock unit and replace the piston rod of cylinder with the temporary shaft.

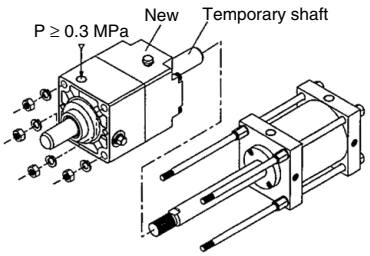

Note) To replace the piston rod assembly with the temporary shaft of a new lock unit, make sure that the compressed air of 0.3 MPa or higher is kept applied to the lock release port.
If the compressed air is exhausted (locked state) while the temporary shaft and piston rod assembly are pulled out from the lock unit, a brake shoe will be deformed and the piston rod assembly cannot be inserted. This makes the lock unit unusable.

d. Tighten the tie-rod nuts (4 pieces) on the cylinder rod side with a socket wrench.

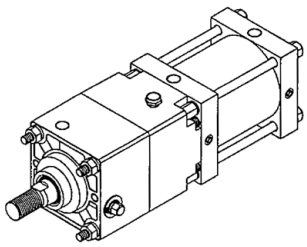

⚠Warning

Customer shall not disassemble the CNS series lock unit.
1. Because of the powerful spring installed, do not loosen or remove hexagon socket head cap screws fixing covers A and B (parts may be shot out).
2. Please consult with our sales person if disassembly and repair are necessary.

⚠Caution

Apply grease and oil to the surface of the piston rod only when it is necessary.

1. Disassembly

1-1. Disassembly should be done in a wide space containing little dust.

1-2. After removing the cylinder, be sure to protect the end of piping port and rubber hose on the machine side with a clean cloth to prevent dust from entering.

1-3. Disassemble the unit with care to prevent damage to the sliding portion.

1-4. Check the double chamfered portion at the rod end for burrs to prevent damage to the seal and the bushing when removing the lock unit from the piston rod. If burrs are found, remove them with a "file."
Remove the lock unit according to "Appendix. Replacement Procedures of Lock Unit."

1-5. Side of the head of nuts for tie-rod with "ratchet handle for socket wrench", "T-type slide handle for socket wrench" or "spinner handle for socket wrench," etc. and remove it from the tie-rod. Refer to the table for "socket for socket wrench."

Bore size (mm)	Nut	Applicable socket
125·140	Class1, M14 x 1.5	JISB4636 Dodecagon22
160	Class1, M16 x 1.5	JISB4636 Dodecagon24
180	Class1, M18 x 1.5	JISB4636 Dodecagon27
200	Class1, M20 x 1.5	JISB4636 Dodecagon30
250	Class1, M24 x 1.5	JISB4636 Dodecagon36

1-6. Remove the 4 tie-rods from the cover.

1-7. Remove the rod cover from the piston rod with care to prevent damage to the seal and bushing.

1-8. Pull the piston rod and pull out the piston from the cylinder tube.

1-9. Remove the cylinder tube from the head cover.
Remove the wiper ring of lock unit. If it cannot be removed by hand, use a small "flat head screwdriver" and remove it with care to prevent damage to it.

1-10. Disassembly of the rod cover (For the head cover, it should also be in accordance with this procedure.)

a. Remove the cylinder tube gasket. When excessive deformation or cut is found with the gasket, replace it.

b. Remove the cushion cover from the cover with a "flat head screwdriver."
(Tool: A screwdriver, Nominal size 8 x 150, Normal type, normal class)

c. Remove the cushion valve seal from the cushion valve with a cloth.

d. Loosen the hexagon socket head cap screw for the push plate with a "hexagon wrench" and remove the push plate. Applicable "Hexagon wrenches" are shown in the table right above.

Bore size (mm)	Hexagon socket head cap screw	Nominal size of wrench
125, 140, 160	M8 x 1.25 x 16L	6
180, 200	M10 x 1.5 x 18L	8
250	M12 x 1.75 x 22L	10

e. Remove the rod seal with a small "flat head screwdriver" with care to prevent damage to it.

f. Remove the push plate gasket.

g. Since the cushion seal is pressed fit, air will leak from the portion where the cushion seal is pressed fit due to damage or change in pressing force. Therefore when the cushion seal should be replaced, the rod cover assembly and the head cover assembly should be replaced.

2. Replacement Procedure of Seal

2-1. Removal of the seal
Please refer to "1. Disassembly" for dismantling of wiper ring, rod seal, valve seal, tube gasket and push plate gasket.
Since piston seal has a deep groove for sealing, use your hand (not a screwdriver) and push from one side of seal and pull it out when it lifts off.

2-2. Application of grease

a. Seals: Apply thin coat of grease.

b. Cylinder component
Apply grease to the individual components as the figure below. The table shows the grease amount required for a cylinder with a 100 mm stroke.

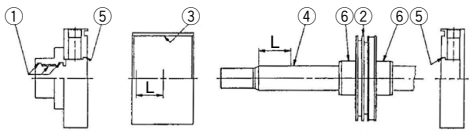

Grease application amount (g)

Bore size (mm)	125	140	160	180	200	250	Portion to apply
100st	15 to 17	20 to 22	24 to 26	27 to 29	30 to 32	33 to 35	① to ⑥
Additional 50st	3	3	3	4	4	5	③④

For grease, use lithium soap group grease JIS #2.

2-3. Mounting of the seal

a. Wiper ring/Rod seal
Mount in the correct direction.

b. Seals other than the wiper ring
After mounting the seals, apply grease on the inside diameter surfaces of the bushing (rubbing grease into surface).

3. Assembly

3-1. Before assembling the cylinder, be sure to clean each part to remove dust.
3-2. Before assembly, apply enough grease to the rod, bushing, tube and seal.
3-3. For rusty part, remove the rust completely.
3-4. Assembly should be done in a clean area with care to prevent foreign objects from entering.

Tightening torque (N·m)

Bore size (mm)		125	140	160	180	200	250
Tie-rod	Steel tube	49		75.5	103	147.1	254
	Aluminum tube	39.2		62.8	92.7	132.4	–
Push plate bolt		11			22		38

3-5. Mount the seal with care to prevent damage to it.
3-6. Insert the piston into the tube or rod into the bushing with care to prevent damage to each seal.
3-7. Tighten the tie-rod and bolt with the appropriate torque shown in the table below.

4. Replacement Procedure of the Lock Unit

4-1. The lock unit for the CLS series can be replaced.

⚠Caution

1. Never disassemble the lock unit.
A heavy duty spring is contained in part of the unit, which presents a serious hazard if disassembly is performed incorrectly.
In addition, the lock unit is adjusted before shipment. If readjustment is not performed correctly after reassembly, a serious danger will be created, as performance will not meet specifications.

2. The cylinder body and the lock unit are heavy materials. Two or more persons are required for the replacement of the unit after cleaning up the working environment.

3. The brake tube assembly and the lock unit can be separated. Do not disassemble any other parts.

4-2. Loosen the 4 tie-rod nuts on the rod cover side of the cylinder with a socket wrench.
Refer to the table below for the size of the tie-rod nut.

Bore size (mm)	Tie-rod nut	Width across flats dimension	Socket
125, 140	JISB1181 Class 1 M14 x 1.5	22	JISB4636 + 2-point angle socket 22
160	JISB1181 Class 1 M16 x 1.5	24	JISB4636 + 2-point angle socket 24
180	JISB1181 Class 1 M18 x 1.5	27	JISB4636 + 2-point angle socket 27
200	JISB1181 Class 1 M20 x 1.5	30	JISB4636 + 2-point angle socket 30
250	JISB1181 Class 1 M24 x 1.5	36	JISB4636 + 2-point angle socket 36

4-3. Release the lock by hand or apply 0.25 MPa to the unlocking port and pull out the lock unit from the base cylinder.

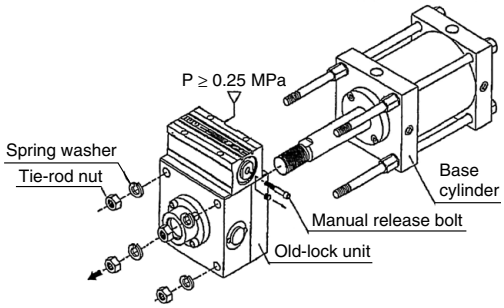

4-4. Remove the 4 holding bolts for the new lock unit brake tube assembly and remove the brake tube assembly.

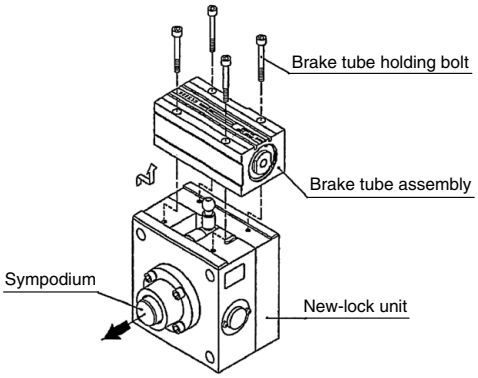

4-5. Pull out the temporary shafts from the lock unit and insert the lock unit to the base cylinder.

⚠Caution

1. Take care not to damage the inner surface of the brake shoe with the width across flats during insertion of the lock unit.

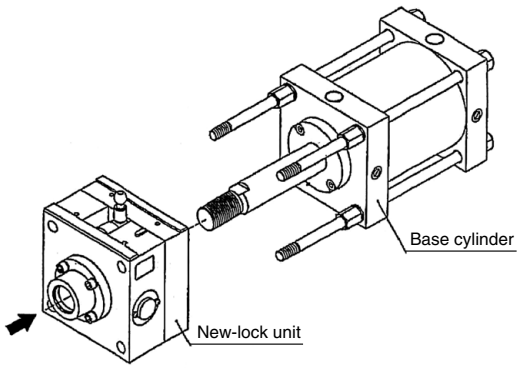

4-6. After making sure that the key is mounted to the specified location, assemble the brake tube assembly and fix it with holding bolts.

(N·m)

Bore size (mm)	Bolt size	Tightening torque (standard)
125, 140	M6	4.8
160	M8	11.9
180	M8	11.9
200	M10	24.5
250	M12	42

4-7. Lastly, tighten the tie-rod nuts.

(N·m)

Bore size (mm)	Bolt size	Tightening torque (standard)
125, 140	M14	34.3
160	M16	53.9
180	M18	73
200	M20	102
250	M24	180

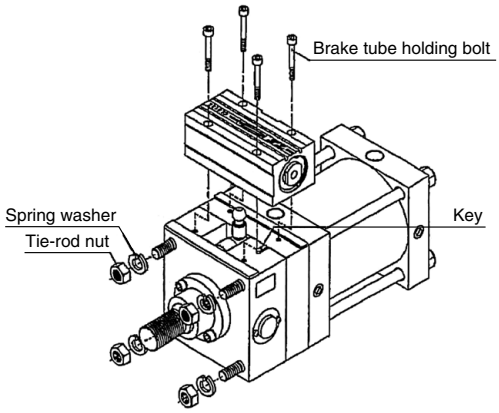

⚠ Caution

Apply 0.08 MPa or more of air pressure to the cylinder port before installing the equipment for checking the operation. Make sure that the manual release bolts are removed before installing the equipment.

1. Maintenance

As for sine rodless cylinders, the cushion ring and seal are assembled to provide the optimum cushioning effect.

Therefore, they should be returned to the factory for maintenance.

If you disassemble them by necessity, please note the following points.

1-1. To remove the external slider or piston slider from cylinder tube, holding force must be released by shifting positions of the external slider and slider piston forcibly. Removing those without doing so, respective magnets call each other directly and may become impossible to separate.

1-2. Upon completing above works to separate respective sliders, by loosening hexagon head cap screw (at plate A side,) remove the cylinder tube and plate A from guide rod A and B. (While replacing works (of packing, so on), other parts should not be disassembled, disassembling other parts may cause to air leakage.)

1-3. The magnet assembly (piston slider and external slider) must not be disassembled. Disassembling this may cause to decrease of holding force and other defects.

1-4. When handling the magnet assembly, watch on your arm should be put off not to get influence from strong magnetic field.

1-5. Thorough care should be taken for the magnet not to drop on the floor or knock against metal.

1-6. Make sure the external slider is in the correct direction. (REAS10 only).
Insert the external slider (slide block) and the piston slider to the cylinder tube. If the direction is incorrect (Fig. 2), turn the piston slider 180 degrees then insert. If the direction is not corrected, the specified holding force will not be realized.

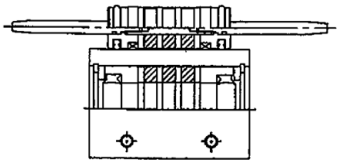

Fig. (1) Correct position

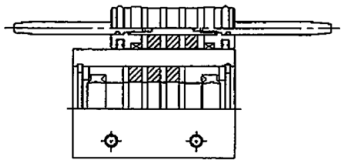

Fig. (2) Incorrect position

1. Disassembly and Reassembly of the Cylinder

Disassemble and assemble the cylinder in a clean area. Put a clean cloth on a working place.
For disassembly, hold width across flats of the head cover or rod cover with a vice, wrench, or monkey wrench, and loose and remove the covers respectively.

2. Removal of the Seal

2-1. Rod seal

The rod seal A can be replaced with the cylinder mounted. On the other hand, the rod seal B should not be replaced by customer because of its difficulty in mounting works.
Use retaining ring pliers (tool for installing a basic internal retaining ring) to remove the retaining ring, and take the piston rod out from the rod cover with closing the ports of the rod cover by fingers. Then, the seal holder and rod seal A will appear and can be removed from the piston rod.

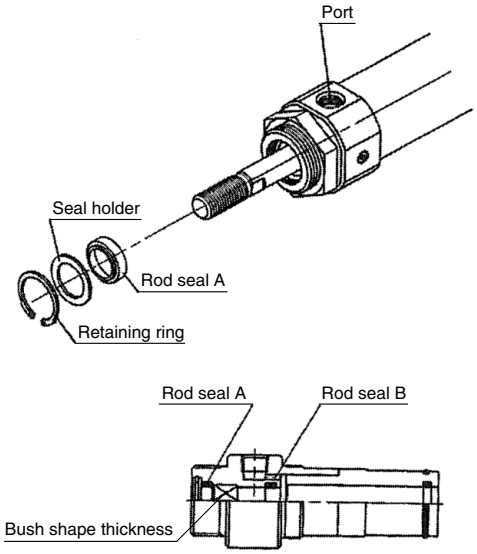

Fig. 1

2-2. Piston seal

Wipe off grease around piston seal first to make removal easier.
Hold the piston seal with one hand and push it into groove so that the piston seal can be lifted off and pulled out without using a watchmaker's screwdriver. (Fig. 2)

2-3. Tube gasket

Remove the tube gasket with a watchmaker's screwdriver or the like. (Be careful not to damage the surrounding parts of the tube gasket.)

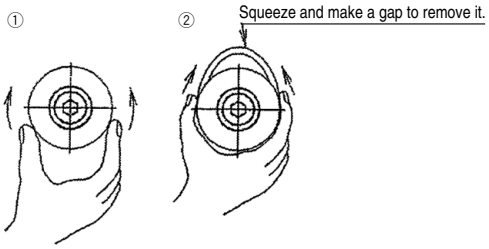

Fig. 2 Removal of the piston seal

3. Application of Grease

Use lithium soap base grease equivalent to JIS class 2. You may also order our grease package (GR-S-010 for 10 g and GR-S-020 for 20 g).

3-1. Rod seal

Apply grease thin around the internal and external faces of the new seal for replacement. This is for smooth mounting of the rod seal to the cover and firm fitting between them. Also, the grease is required for the seal groove.

3-2. Piston seal

Apply grease thin and evenly around the internal and external faces of the piston seal for smooth mounting to the piston.

3-3. Tube gasket

Apply grease thin to the tube gasket to prevent it from coming off from the cylinder when assembling.

3-4. Other parts of the cylinder

The parts of the cylinder shown in Fig. 3 also require grease to be applied. The amount shall be as specified in Table 1 for one cylinder with a 100 mm stroke. You can consider the amount scooped by index finger to be approx. 3 g. (Fig. 4)

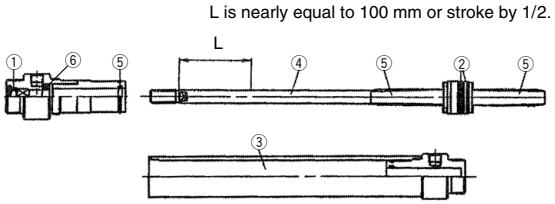

Fig. 3 Grease application points

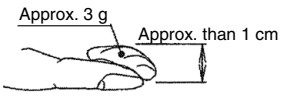

Fig. 4 Grease amount

Table 1 Grease application amount (g)

Stroke	ø20	ø25	ø32	ø40	Applying position
100 stroke	2	3	3	3 to 4	①②③④⑤⑥
Additional 50 stroke	0.5	0.5	0.5	1	③④

4. Mounting of the Seal

4-1. Rod seal

Mount the rod seal with care for direction. When passing the rod seal through the threaded part at the piston rod end and width across flat, press the rod seal slowly and gradually with rotating. And then, mount it to the housing of the rod cover firmly.

After that, mount the seal holder and retaining ring.

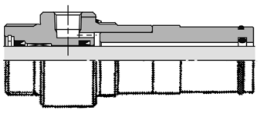

Fig. 5

4-2. Piston seal

Mount the piston seal and rub grease into the inside and the external face of the seal groove as shown in Fig. 6.

4-3. Tube gasket

Mount the tube gasket, apply grease slightly and mount to the head and rod covers.

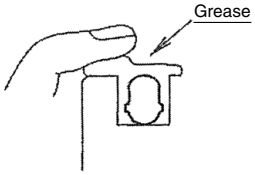

Fig. 6

That is all for the replacement of seals. After they are assembled, check if the cylinder operates smoothly by hand and there is no air leakage as the last step.

1. Replacement of the Seal

Seal for cylinder should be disassembled and reassembled on the clean bench without metal chips and dust. Attached metal chips and dust will cause air leakage. Pay great attention to the operation to prevent air leakage.

1-1. Removal of the mounting nut and bracket
The bracket such as a foot or flange is fixed with a nut. Loosen the nut to remove the bracket and mounting nut.

1-2. Removal of the relief valve body holder
Since the relief valve body holder is fixed with a set screw, use a hexagon wrench to loosen it. The relief valve body holder on the cover side is slightly deformed due to screw. When the relief valve body holder is removed from the cover, remove it as rotating.

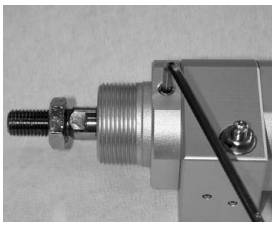

Picture 1: R/C side

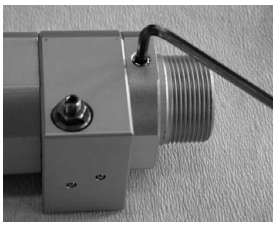

Picture 2: H/C side

1-3. Removal of the rod cover
When the cylinder cover is removed after the relief valve body holders on both rod and head cover side removed, fix head cover with a vice and loosen the screwed-in rod cover with a wrench or monkey wrench.

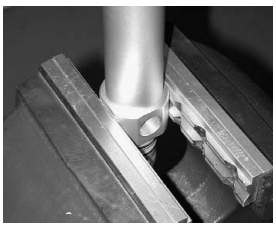

Picture 3: Fixed (H/C side)

Picture 4: R/C side

1-4. Removal of the piston rod assembly
Extract the piston rod assembly from the tube as rotating it after the rod cover is removed,

1-5. Removal of the head cover
Loosen the screwed-in tube as rotating it with a pipe wrench leaving head cover fixed with a vice. Pay great attention to the operation to prevent the inside of the tube from deformation.

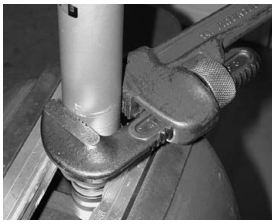

Picture 5: H/C side

1-6. Removal of the rod seal
Since rod seal is mounted on the cover part where groove is machined, remove it with a watchmaker's screwdriver.

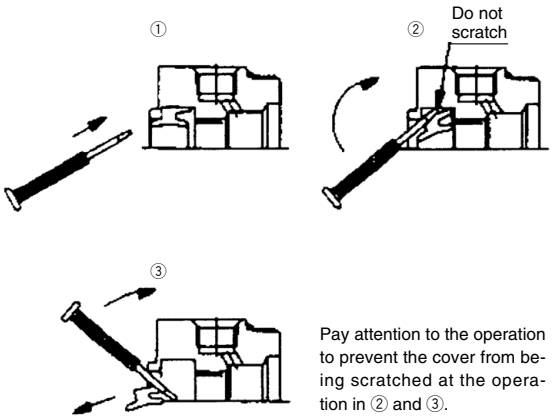

1-7. Removal of the piston seal
Wipe off grease around the piston seal to remove it easily, then remove it in accordance with the procedure stated below.

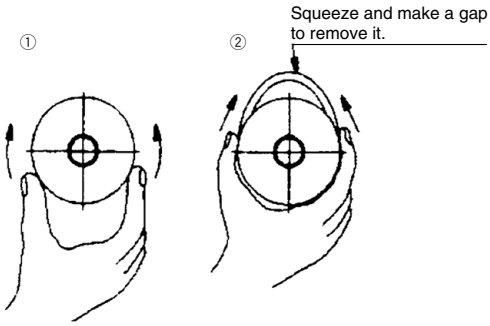

1-8. Replacement of the wear ring
When the wear ring is worn out, remove and replace it with a watchmaker's screwdriver.

1-9. Removal of the cushion seal
Since the cushion seal is mounted on the parts of rod and head cover where groove is machined, remove it carefully with a watchmaker's screwdriver with the same operation for the rod seal.

1-10. Each O-ring
Remove each part just in the case that there are flaws on surface of O-ring. Use the same operation as the piston seal for the small O-ring which mounted on the groove. Put small amount of grease.

1-11. Installation of the rod seal
Install the rod seal with correct direction after applying grease on whole part. Check if there is no deformation on seal, and if so, set it correctly with finger.

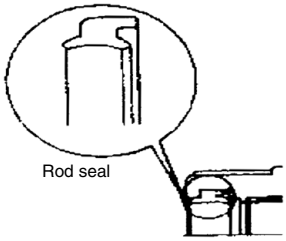

Picture 6: Installation of rod seal

1-12. Installation of the cushion seal
Install the cushion seal with correct direction after applying grease on whole part. Check if there is no deformation on the seal, and if so, set it correctly with finger.

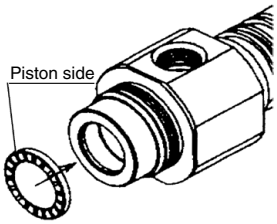

Picture 7: Installation cushion seal

1-13. Installation of the piston seal
Install piston seal by expanding it to mounting groove after applying grease on whole part. Then, put grease to the outside of the piston like below diagram.

Picture 8: Installation of the piston seal

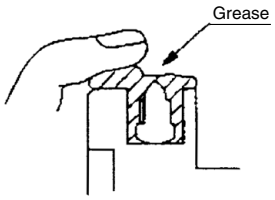

1-14. Grease for the piston rod assembly
Spread grease thinly and equally to pointed part stated below.

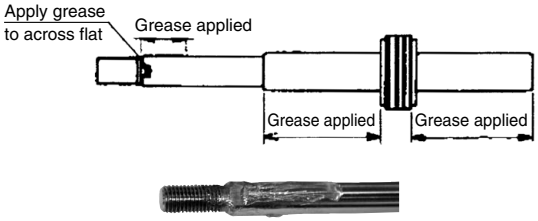

Picture 9: Grease applied piston rod assembly

1-15. Preliminary tightening of the tube and cover
Prepare assembly by screwing head cover in tube with hand.

1-16. Grease for the sliding portion (I.D.) of the tube
Apply grease the inside of the cylinder tube. Put approx. 1 cm (3 g) of grease on finger as standard and apply it to the range, which is equivalent length to cylinder I.D. equally.

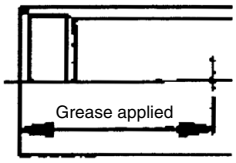

1-17. Insertion of the piston rod assembly
Insert the piston rod assembly to the assembly in step 1-16. Pay great attention to the operation to protect the piston seal from flaws by screw at the end of the tube.

1-18. Preliminary tightening of the rod cover
Screw-in rod cover to the assembly assembled up to 3-17 with hand. Pay great attention to operation to protect the rod seal from flaws by screws on the end of tube.

1-19. Final tightening of the cover
Fix head cover with vice and screw-in rod cover with a wrench or monkey wrench with the same procedure at disassembly. Tight additionally approx. 1~2° as standard considering the relation of ports between the rod cover and the head cover before disassembly.

1-20. Installation of the relief valve body
Install the valve body on the cover. Install it as rotating until it touch's to the end of the cover as facing C chamfer to outside.

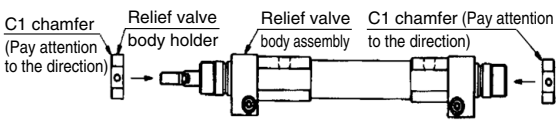

1-21. Relief valve fixing

Fix the hexagon socket set screw with a hexagon wrench. Refer to the following table for tightening torque.

Table 3, Tightening torque (N·m)

Model	Tightening torque
RHC*20	1.5 ± 10%
RHC*25	1.5 ± 10%
RHC*32	2.6 ± 10%
RHC*40	2.6 ± 10%

1-22. Check before cylinder installation

Perform a trial operation with a min. operating pressure of 0.05 MPa before mounting cylinder to check if each part is not loosened or if there is no air leakage, then check same things at a max. operating pressure of 1.0 MPa. After checking no failure on parts, install the cylinder.

1. Replaceable Seal

1-1. The seals shown on the below figure can be replaced.

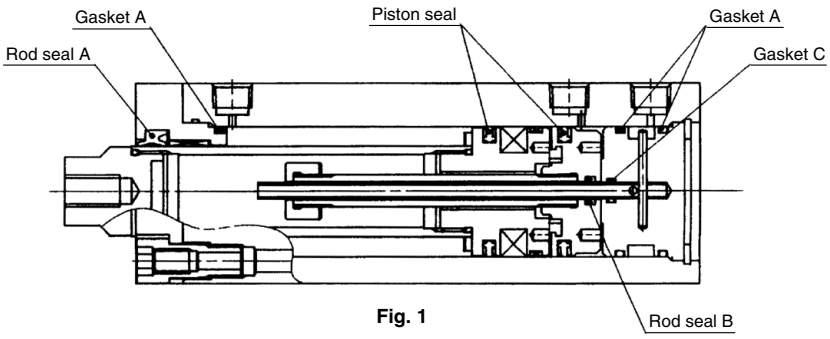

Fig. 1

2. Disassembly of the Cylinder

⚠Caution

Disassemble and assemble the cylinder in a clean area.
Use a clean cloth.
Before disassembly, eliminate the dirt on the outer surface so that foreign material does not enter the cylinder or the guide.

2-1. Removing of the rod cover
Loose the fitting bolts, and remove the rod cover.

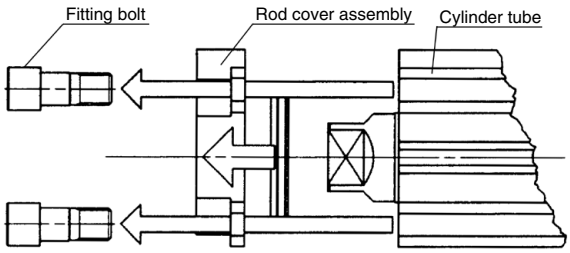

Fig. 2

2-2. Removal of the components
Following the removal of the retaining ring, press the tube rod cover out from the rod side, and take it out from the head side.

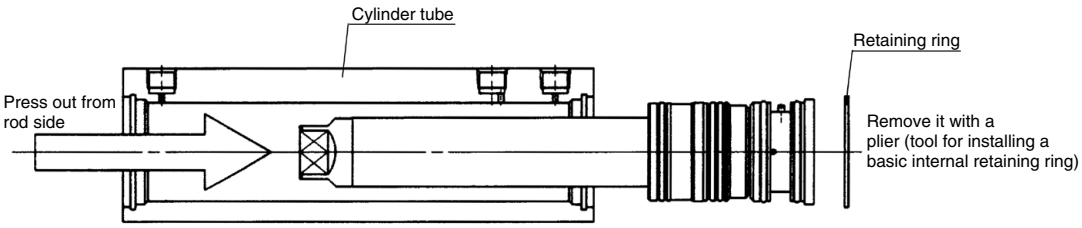

Fig. 3

⚠Caution

Perform mounting and removal of the retaining ring with a proper plier (tool for installing a basic internal retaining ring).
There is a risk of causing damage for human body and peripheral equipment when a retaining ring is removed from the end of plier even if it is a proper plier. Supply air after checking the retaining ring is mounted at the retaining ring groove securely.

2-3. Removal of the head cover assembly
Take the head cover assembly out from the piston rod assembly.
(The piston rod assembly cannot be further disassembled.)

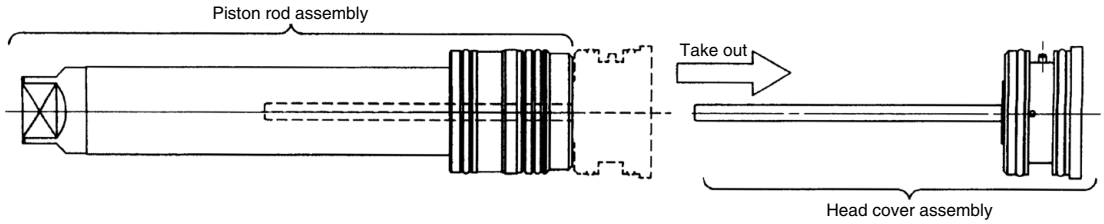

Fig. 4

2-4. Take the parallel pin out from the head cover, and remove the inner pipe.

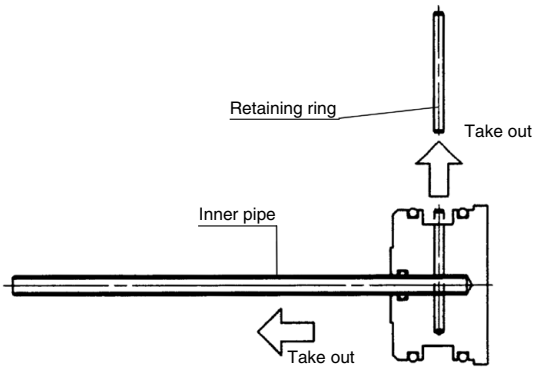

Fig. 5

3. Removal of the Seal

3-1. Removal of the rod seal
Remove the seal by inserting a watchmaker's screwdriver from the front side of the rod cover. During this work, do not give a flaw on the seal groove at the rod cover.

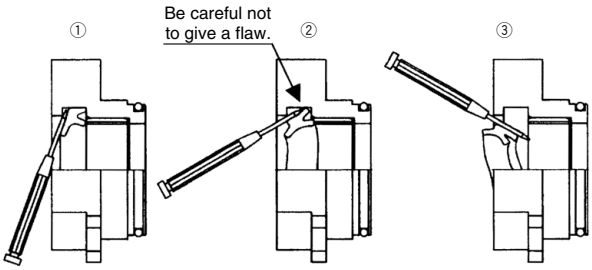

Fig. 6

3-2. Removal of the piston seal
a. Wipe out grease around the piston seal (it helps easy removal of a piston seal).
b. As the piston seal groove is deep, remove the seal using a gap made by squeezing it, not using a precision driver.

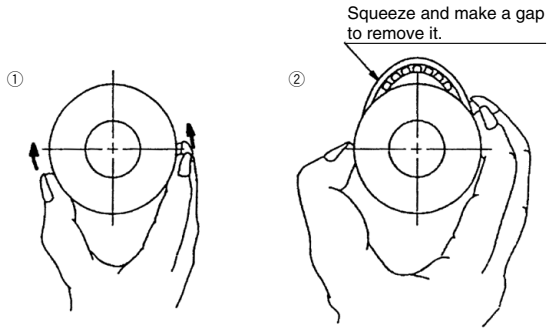

Fig. 7

3-3. Removal of the gasket

a. Gasket around the rod cover and head cover
In the same way as the removal of the piston seal, squeeze the gasket and make a gap to remove it.

b. Gasket inside the head cover
In the same way as the removal of the rod seal, insert a watchmaker's screwdriver to remove it. Be careful not to give a flaw on the seal groove at the rod cover.

4. Application of Grease

4-1. Rod seal, piston seal
Apply grease thinly and evenly to the seal for replacement. Fill grease into the groove.

4-2. Gasket
Apply grease thinly and evenly to the gasket for replacement.

4-3. Cylinder parts
Apply grease to each part.
Refer to "6. Assembling of Cylinder" for the parts to apply grease.

Fig. 8

5. Mounting of the Seal

5-1. Rod seal
Mount the seal with care of its direction. Apply grease to the seal and the internal face of the bushing evenly after mounting it as shown on Fig. 9.
Apply grease to rod seal B with a precision driver.

5-2. Piston seal
Mount the seal without twisted. After mounting it, apply the grease to the seal and the seal groove as shown on Fig. 10.

5-3. Gasket
Fit it up with care of drop off.

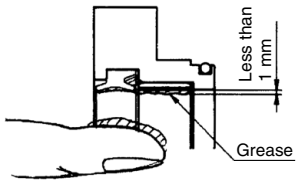

Fig. 9

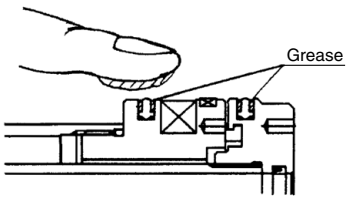

Fig. 10

6. Assembly of the Cylinder

6-1. Apply grease to insertion for the head cover at the inner pipe.

6-2. Insert the inner pipe to the head cover. (Match the hole of head cover with the one of inner pipe.) Perform Inserting slowly and carefully so as not to catch the gasket.

6-3. Get the parallel pin through the head cover and the inner pipe.

6-4. Pull the inner pipe lightly to check it will not fall off from the head cover.

6-5. Apply grease to the inner pipe.

6-6. Insert the head cover assembly (inner pipe) to the piston rod assembly. Perform Inserting slowly and carefully so as not to catch rod seal B.

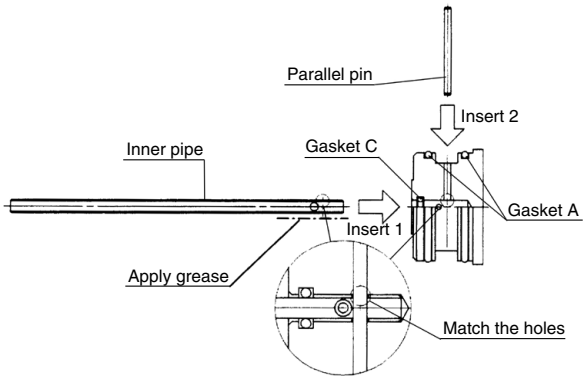

Fig. 11

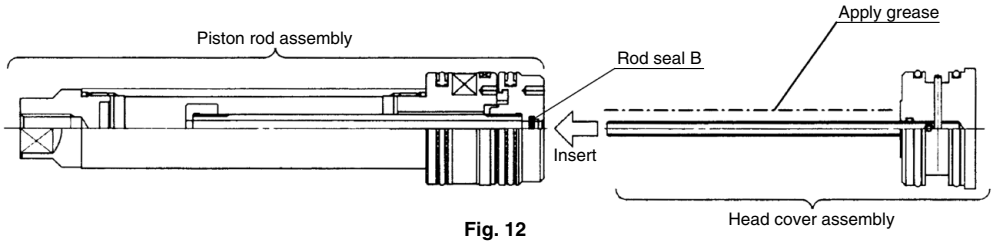

Fig. 12

6-7. Apply grease to the inside of the cylinder tube and outside of the tube rod, piston A, and piston B.
6-8. Insert the piston rod assembly and head cover assembly to the cylinder tube. Perform Inserting slowly and carefully so as not to catch the piston seal and the gasket.
6-9. Mount a retaining ring on the cylinder tube to fix the head cover.

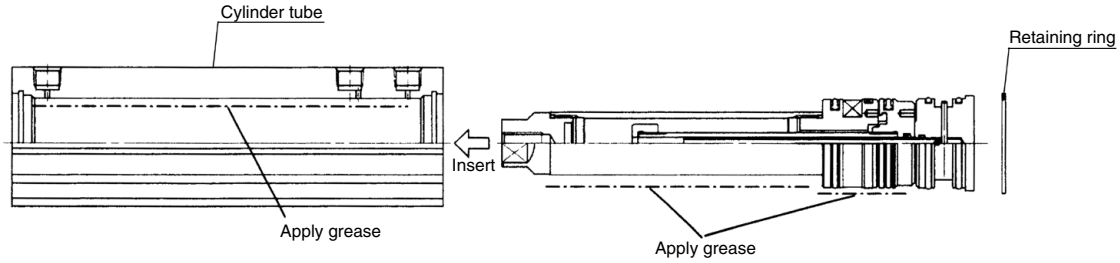

Fig. 13

6-10. Insert the rod cover assembly to the cylinder tube. Mount the rod seal A slowly and carefully so as not to be caught.
6-11. Apply locking agent to the fitting bolt.
6-12. Tighten the fitting bolts at the cylinder tube to fix the rod cover. Refer to Table 1 for the tightening torque of the fitting bolts.

Table 1

Bore size (mm)	Nominal size	Tightening torque [N·m]
32	M8 x 0.75	6.2
40	M8 x 0.75	6.2
50	M10 x 0.75	15.6
63	M12 x 1.0	21.0

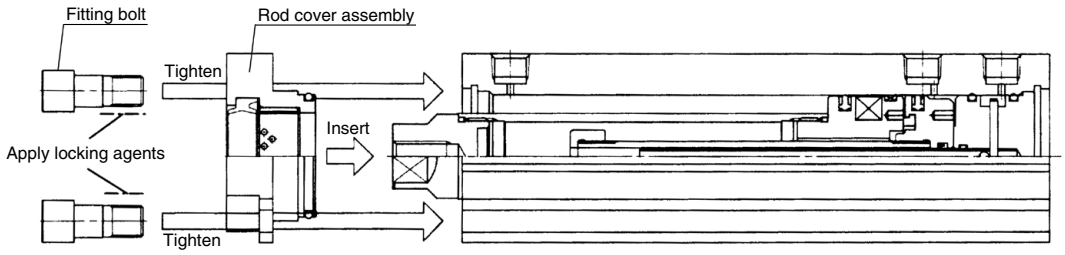

Fig. 14

After completing the assembly, confirm that there is not air leakage from the sealing parts, and also that it operates smoothly with the low operating pressure.

1. Caution

1-1. Hexagon socket head set screw

The hexagon socket head set screw on the outside surface of the MK series cylinder tube must be securely tightened in order to retain the rotational function of the piston rod. Because of this, it should never be loosened except for during disassembly for maintenance.

After loosening for maintenance, be sure to tighten the hexagon socket head set screw back to the proper position.

If operated while not positioned properly, damage to the piston rod rotation mechanism may occur. In addition, refrain from operating if the hexagon socket head set screw or the guide pin have become deformed or have been damaged in any way.

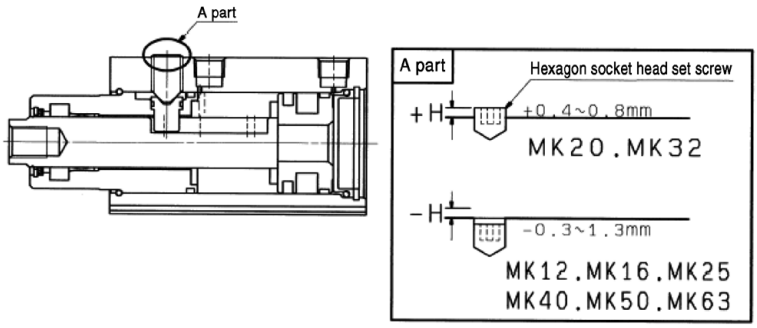

Height	MK12	MK16	MK20	MK25	MK32	MK40	MK50	MK63
H	−0.8	−1.3	+0.4	−0.5	+0.8	−0.3	−1.0	−1.0

1-2. Retaining ring installation/removal

For installation and removal, use an appropriate pair of pliers (tool for installing a basic internal retaining ring).

Even if a proper plier (tool for installing a basic internal retaining ring) is used, it is likely to inflict damage to a human body or peripheral equipment, as a retaining ring may be flown out of the tip of a plier (tool for installing a basic internal retaining ring). Be much careful with the popping of a retaining ring. Besides, be certain that a retaining ring is placed firmly into the groove of rod cover before supplying air at the time of installment.

2. Disassembly of the Cylinder

To disassemble, refer to the construction drawing in “6. Basic Construction.”

2-1. Cleaning of the external surface

Remove dusts and foreign objects from external surfaces to prevent them from entering the cylinder during disassembly. In particular, the surface of the piston rod and the collar should be cleaned carefully.

2-2. Hexagon socket head set screw removal

Loosen the hexagon socket head set screw to remove it.

2-3. Removal of the retaining ring

· For bore sizes ø12, ø16, and ø40 to ø63, it is located on the rod side end of the tube.

· For bore sizes ø20 to ø32, it is located on the head side end of the tube.

2-4. Detaching from the cylinder tube

· ø12, ø16, ø40 to ø63

Pull out the rod cover together with the piston rod from the tube.

· ø20 to ø32

Push the rod cover together with the piston rod toward the tube side. Then, after pushing the head cover and O-ring out from the opposite side (the head side of the tube), pull the rod cover and piston rod assembly out.

2-5. Guide pin removal

Pull the guide pin out from the rod cover using pliers to remove the piston rod assembly.

⚠ Caution

As there is nowhere to grip the bore size ø20 guide pin with pliers, it must be pushed out from the opposite side (from inside the rod cover). To do so, use a watchmaker’s flat head screwdriver, or another thin tool that can fit in between the tip of the guide pin and the bottom of the piston rod/guide groove, to push the guide pin out.

3. Removal of the Seal

3-1. Coil scraper

· ø20 to ø32
After removing the inverted internal retaining ring, be sure to remove the coil scraper as well as the scraper presser underneath it from the rod cover.

· ø40 to ø63
After removing the inverted internal retaining ring, be sure to remove the coil scraper with the 2 scraper pressers on each side of it from the rod cover.

3-2. Rod seal

Insert a watchmaker's screwdriver into the rod side of the rod cover to remove it.
Do not give a flaw on the seal groove at the rod cover.

3-3. Piston seal

Push the tube gasket partially to make it come off and pull it out manually.

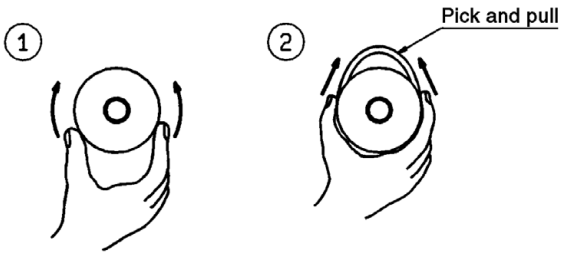

Piston seal

4. Application of Grease

4-1. Rod seal, piston seal
Apply grease around the replacement seal.

Rod seal

Piston seal

4-2. Tube gasket, O-ring (For guide pin)
Thinly apply grease to the tube gasket.

4-3. Cylinder parts
Apply grease to all sliding parts.

· Rod cover

ø12, ø16

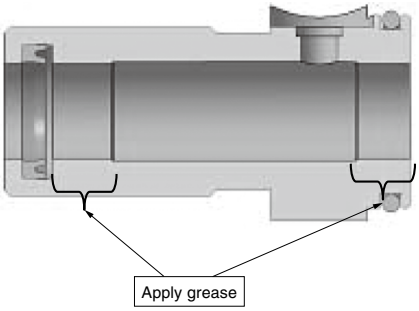

ø20 to ø63

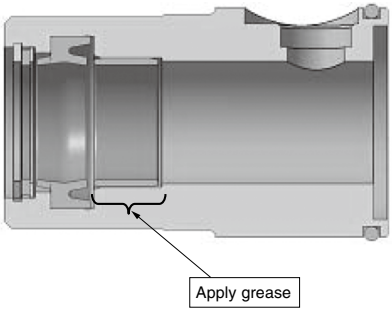

· Piston rod assembly

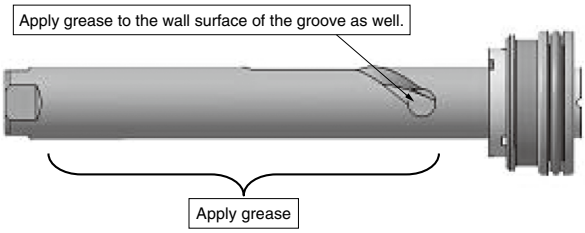

· Cylinder tube

ø12, ø16

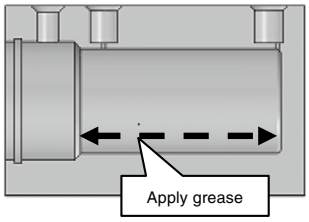

ø20 to ø32

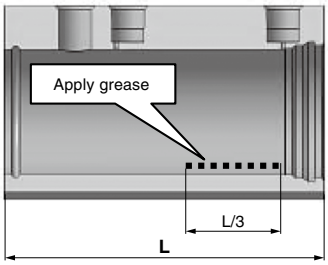

ø40 to ø63

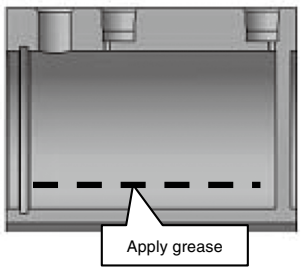

5. Mounting of the Seal

5-1. Coil scraper

Reassemble while referring to “3. Removal of the Seal” above, taking into account that there are part composition differences between cylinder sizes.

5-2. Rod seal

Mount the seal with attention to direction. (Refer to the figure below.)
Then, apply the grease on the seal evenly.

ø12, ø16

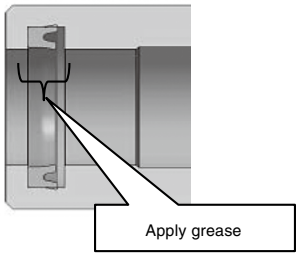

ø20 to ø63

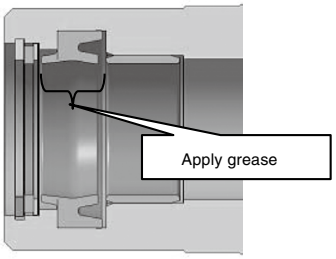

5-3. Piston seal

Mount without twisting. After mounting, apply grease to the external circumference of the seal, and the gap to the mounting groove.

Piston seal

5-4. Tube gasket, O-ring (For guide pin)

Pay attention not to make the gasket come off.

6. Reassembly of the Cylinder

6-1. Insert the piston rod into the rod cover.

Apply grease to the piston rod end or 30° angled raise and wrench flat, and insert the collar gently with care not to damage the rod seal.

6-2. Guide pin mounting

After inserting the piston rod assembly into the rod cover, line up the guide pin hole with the guide groove, and insert the guide pin.

6-3. Insertion of piston and rod cover to cylinder tube.

· ø12, ø16, ø40 to ø63
Insert the rod cover/piston rod assembly assembled in 6-1 and 6-2 into the rod side of the tube, lining up the guide pin with the tube set screw hole, and then adjust the direction of the rod cover.

· ø20 to ø32
Insert the rod cover/piston rod assembly assembled in 6-1 and 6-2 into the head side of the tube, lining up the guide pin with the tube set screw hole, and then adjust the direction of the rod cover.

6-4. Mounting of hexagon socket head set screw

Using the tip of a hexagon socket head set screw, hold the guide pin in the tube from directly above, and then secure the rod cover to the tube.

⚠ Caution

After referring to "1-1. Hexagon socket head set screw," be sure to tighten it securely.

6-5. Mounting of the retaining ring

Use an appropriate pair of pliers (tool for installing a basic internal retaining ring). Pay attention that the ring will slip off from the pliers, and cause injury or damage to peripheral equipment. Additionally, ensure the retaining ring is mounted properly into the retaining ring groove.

⚠ Caution

For bore sizes ø20 to ø32, reapply grease on the inner surface of the tube, and then install the head cover and O-ring followed by the retaining ring. For grease application, refer to the drawing below.

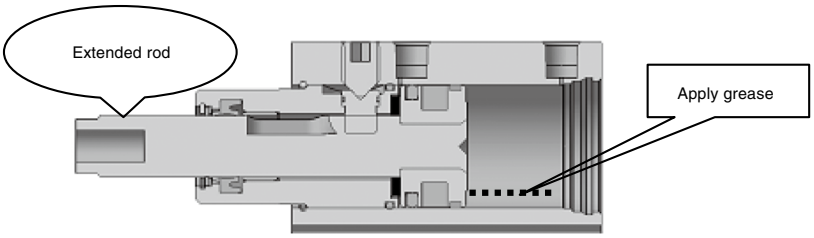

ø20 to ø32

6-6. Check the assembly condition.

Confirm that there is no air leakage from the seal and that the cylinder can operate at a minimum operating pressure.

1. Disassembly of the Cylinder

1-1. Cleaning
Prior to disassembly, wipe off any dirt from the outside of the actuator. This will prevent the intrusion of dust and foreign materials during disassembly.
Take particular care on the surface of the piston rod.

1-2. Removal of the arm
Remove the arm with rod point.

1-3. Removal of the hexagon socket head cap screw [only ø25 or more]. (Fig. 1)
Remove the hexagon socket head cap screw (with a washer or spring washer).

1-4. Removal of the retaining ring (Fig. 2)
Remove with an appropriate pair of pliers (tool for installing a basic internal retaining ring). Moreover, please note that the retaining ring comes off from pliers when detaching it, it files, and the human body and peripherals might be disadvantaged.

1-5. Disassembly
Install the bolt etc. in the point part of the piston rod, and pull it out with the rod cover assembly and the key.
In that case, please note that neither the inside diameter of the tube nor the rod cover bearing are damaged.

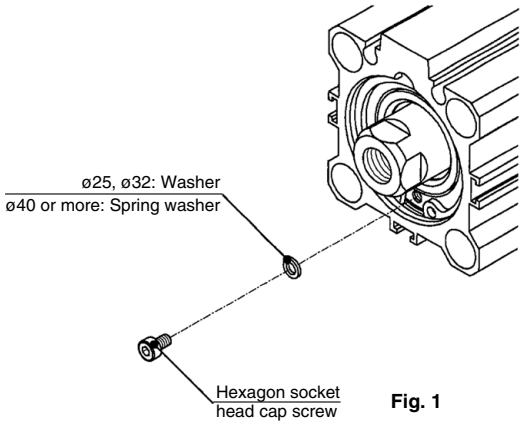

Fig. 1

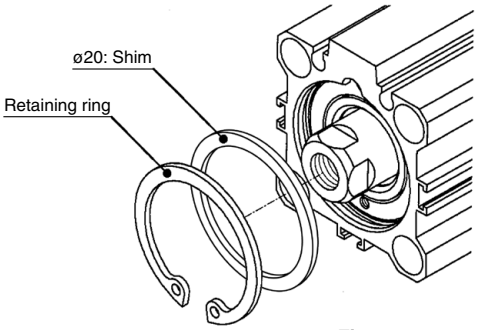

Fig. 2

2. Removal of the Seal

2-1. Removal of the coil scraper
Insert a precision driver etc. from front the rod cover assembly and prise the seal out. From front rod cover assembly and prise the coil scraper out.
Take care not to scratch or score the coil scraper groove in the rod cover assembly.

2-2. Removal of the rod seal
Insert a precision driver etc. from front the rod cover assembly and prise the seal out.
Take care not to scratch or score the seal groove in the rod cover assembly.

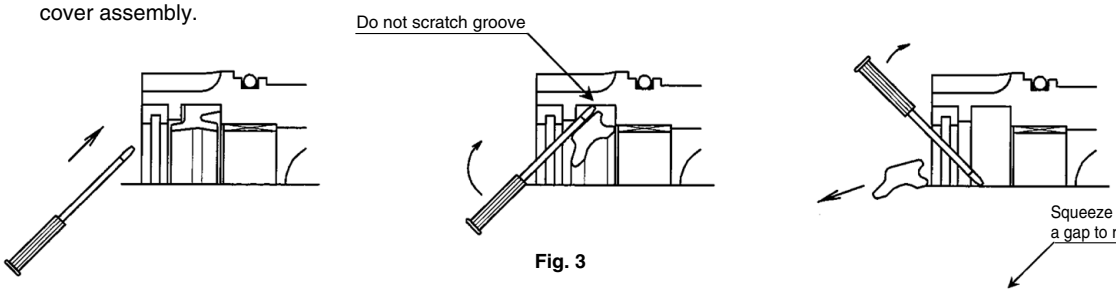

Fig. 3

2-3. Removal of the piston seal
As the piston seal groove is deep, remove the seal using a gap made by squeezing it, not using a precision driver.

2-4. Removal of the tube gasket
Squeeze the gasket and make a gap to remove it.
(Refer to the right Fig. 4).

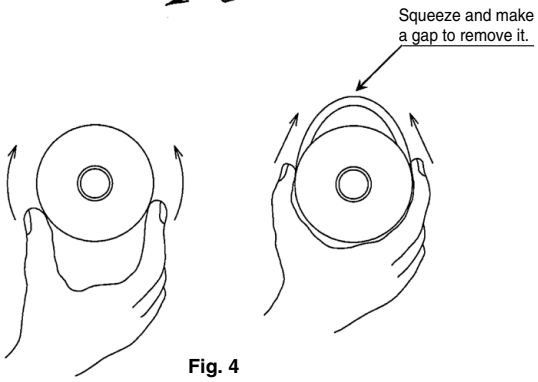

Fig. 4

3. Application of Grease

3-1. Grease spreading of rod seal and piston seal (Fig. 5)
There is thinly no irregularity and lithium system grease* is spread on all surroundings of the rod seal and piston seal for the exchange.
*SMC recommendation grease: It is possible to arrange. (Refer to the operation manual.)

3-2. Grease spreading of tube gasket
There is thinly no irregularity and lithium system grease* is spread on the whole of the tube gasket for the exchange.
*SMC recommendation grease: It is possible to arrange. (Refer to the operation manual.)

3-3. Grease spreading of each part
There is thinly no irregularity and lithium system grease* is spread on a specified part of the rod cover assembly, piston rod assembly and cylinder tube assembly.
*SMC recommendation grease: It is possible to arrange. (Refer to the operation manual.)

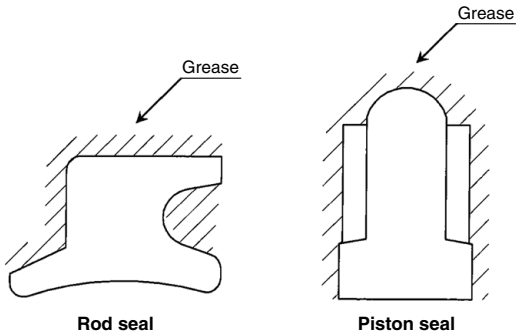

Fig. 5

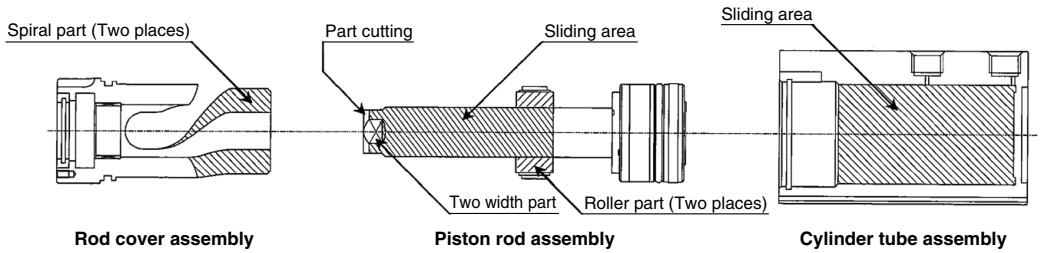

Fig. 6

4. Installation of the Seal and Coil Scraper

4-1. Installation of the rod seal and tube gasket (Fig. 7)
Install the direction of rod seal so as not to make a mistake.
Install the tube gasket so as not to drop out of rod cover assembly.
After it installs it, there is no irregularity and lithium system grease* is spread on the rod seal and bearing.
*SMC recommendation grease: It is possible to arrange. (Refer to the operation manual.)

4-2. Installation of the coil scraper
Install the coil scraper for the exchange in the coil scraper ditch surely.

4-3. Installation of the piston seal (Fig. 8)
Install it so that the piston seal should not twist.
Spread it to rub lithium system grease* into between piston seal outer part and the ditch after it installs it.
*SMC recommendation grease: It is possible to arrange. (Refer to the operation manual.)

4-4. Installation of the tube gasket
Please note the dropout, and install it.

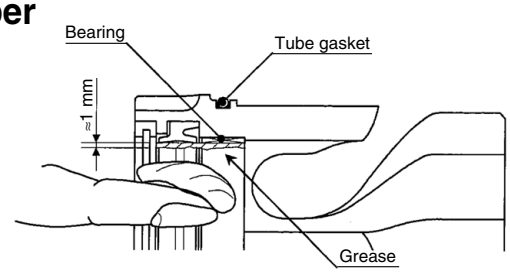

Fig. 7

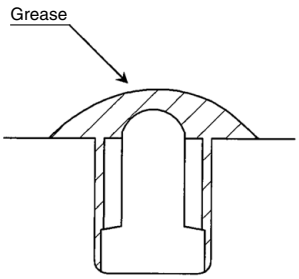

Fig. 8

5. Assembly of the Cylinder

5-1. Insertion of the rod cover assembly (Fig. 9)
Insert it politely slowly so as not to damage the rod seal in corner part piston rod assembly.

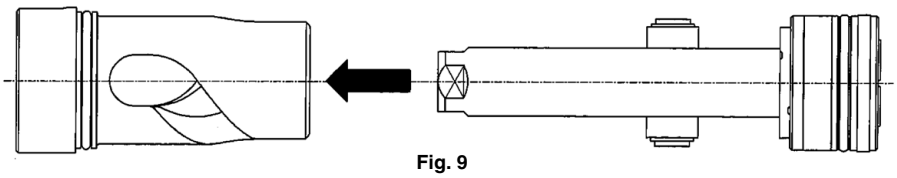

Fig. 9

5-2. Insertion of the piston rod assembly (Fig. 10)
Insert it politely slowly to damage neither the piston seal nor the tube gasket in corner part cylinder tube assembly.

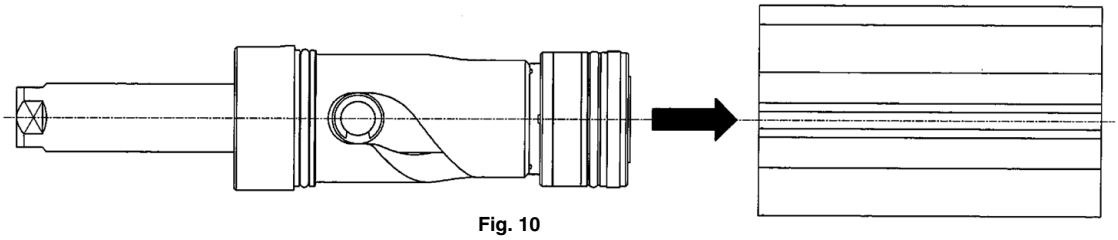

Fig. 10

5-3. Installation of the key and retaining ring (Fig. 11)
Insert the key in the key ditch, and install the retaining ring with an appropriate pair of pliers (tool for installing a basic internal retaining ring).
In that case, install the direction of the retaining ring so as not to make a mistake.
Because the retaining ring comes off from pliers when it installs it, it flies, and the human body and peripherals might be disadvantaged. Please note it.
Moreover, please confirm whether in the retaining ring ditch surely.

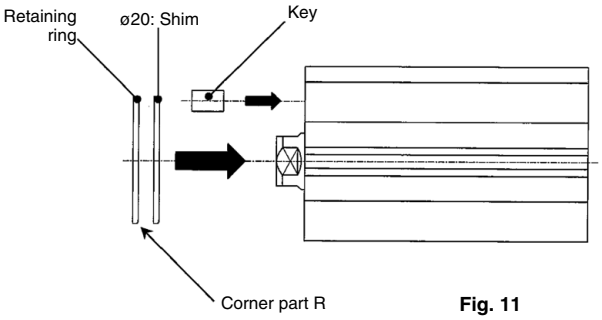

Fig. 11

5-4. Installation of the hexagon socket head cap screw [only ø25 or more] (Fig. 12)
After cleaning the adhesive from the hexagon socket head cap screw and the rod cover assembly with alcohol etc., apply the tightening adhesive to the screw holes of the rod cover assembly (SMC recommended adhesive: Loctite Corp. 242 [Blue]) in order not to loose.
Spread the adhesive (SMC recommendation adhesive: Loctite Corp. 242 [Blue]) for loose stop on screw hole part rod cover assembly.
Tighten with the hexagon socket head cap screw (∗ø25, ø32: with washer/ø40 or more: with a spring washer).
Please confirm whether the adhesive has overflowed after it concludes it.
Wipe an extra adhesive off when overflowing.

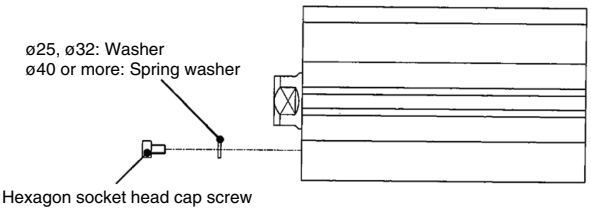

Fig. 12

Tightening torque

Bore size	Size of screw	Tightening torque (N·m)
ø25, ø32	M2.5 x 0.45	0.36 ± 10% (0.324 to 0.396)
ø40, ø50, ø63	M3 x 0.5	0.63 ± 10% (0.570 to 0.690)

5-5. Check the assembly condition.
Confirm that there is no air leakage from the seal and that the cylinder can operate smoothly at a minimum operating pressure.

⚠Caution

1. **Confirm air is not supplied for the cylinder before disassembly and reassembly.**
2. **Never disassembly lock unit [For only CLKQG/CLKQP series]**
   The lock unit is equipped with heavy duty spring and may cause danger if disassembled.
   Also, if it is reassembled incorrectly, the locking performance is impaired and desired function become unavailable.
   For these reasons, the disassembly of lock unit at customer's site is prohibited strictly.
   (If disassembly or replacement of a part is required absolutely, contact SMC.)

1. Romoval of the Spatter

a. Insert a flat head screwdriver into the groove of cover and set up the cover straight toward direction marked with arrows by the driver. Then the cover is opened.
∗ If excessive force is given to do this, the cover may be damaged.
b. Collect the spatter inside the groove.
c. Push the cover unit it snaps.

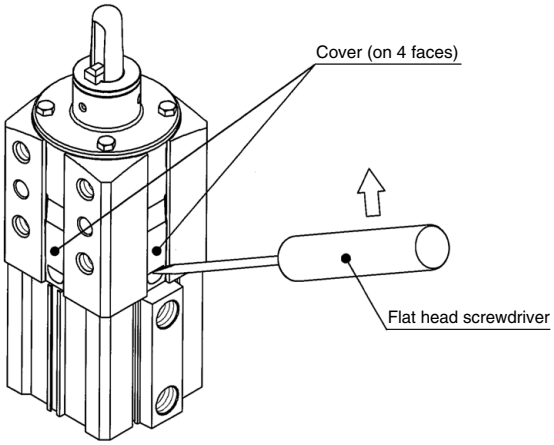

2. Replacement of the Guide Pin and Clamp Arm

The clamping position height: For the LOW type

1. Disassembly of the clamping part
   a. Cleaning of the appearance
   Wipe off the dirt of appearance to prevent intrusion of dust and foreign objects during disassembly.
   b. Removal of the guide pin assembly
   Adjust the position of the clamp arm to the unclamping side, detach the hexagon socket set screw (3 pcs.), and guide pin assembly from guide tube.
   Detach the parallel pin which does a positional match of the guide tube and guide pin assembly.

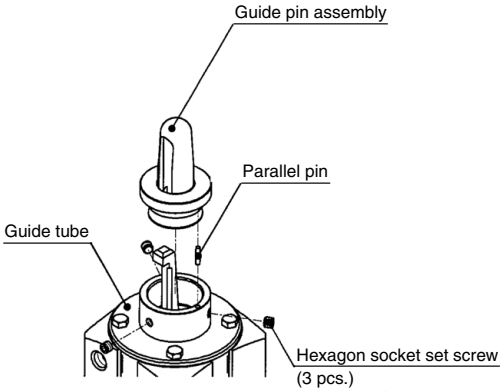

c. Removal of the clamp arm
   1) Detach the hexagon head bolt (4 pcs.), and detach the guide tube from the body.

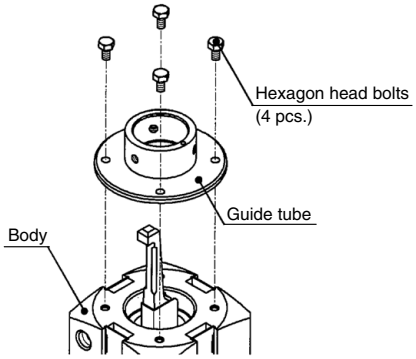

   2) Insert a flat head screwdriver or similar object into the cover groove and open. Then detach the cover (4 pcs.).
   Detach pin A from the body side hole.
   Pay attention to cut neither the hand nor the finger, etc. when you detach the cover.

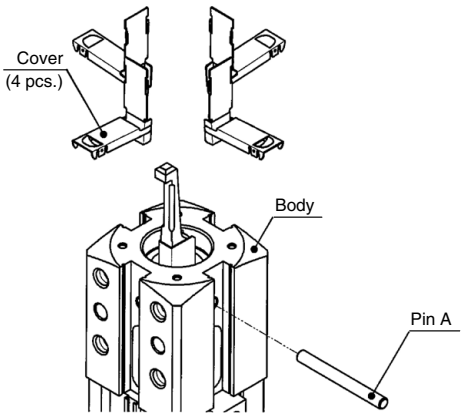

3) Loosen the hexagon socket head cap screw (4 pcs.) the base cylinder, and detach the body from the base cylinder.

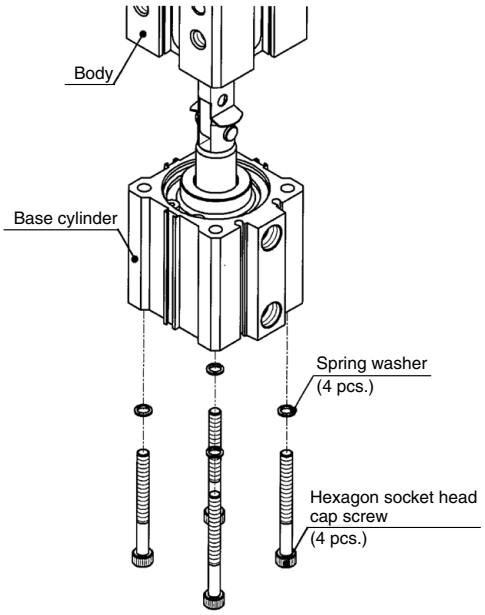

4) Extract the cotter pin, detach pin B, and detach the clamp arm (The spatter cover also together).

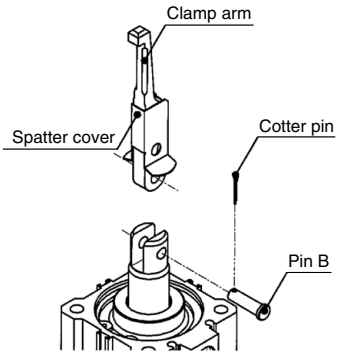

2. Reassembly of the clamping part

a. Check the part number.

Check the number printed on clamp arm and guide pin assembly with reference to the following table.

	Printed no.	
	Guide pin assembly	Clamp arm
Applicable combination	125, 127, 128, 129, 130	13
	145, 147, 148, 149, 150	15-16
	155, 157, 158, 159, 160	15-16
	175, 177, 178, 179, 180	18
	195, 197, 198, 199, 200	20
	245, 247, 248, 249, 250	25
	295, 297, 298, 299, 300	30

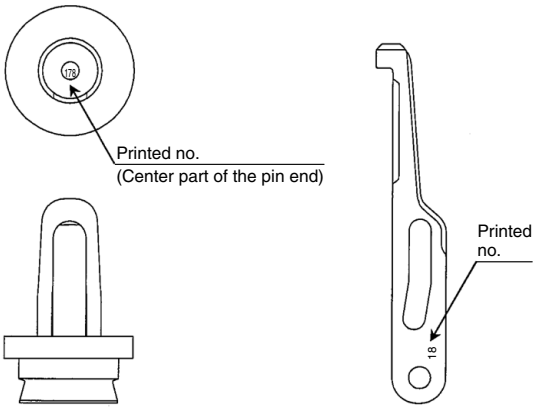

Guide pin assembly **Clamp arm**

b. Mounting of the clamp arm

1) There is thinly no irregularity and lithium system grease is spread on the slash part of the clamp arm for the exchange (both sides).
Moreover, there is no irregularity and lithium system grease is spread on the pin hole part and the cam ditch part of the clamping arm a lot (Grease can collect).
Install the spatter cover (The direction is noted) in the clamping arm.
In that case, install it so that the pin hole of the spatter cover and the cam groove of the clamp arm are visible.

Grease application amount (standard)

Both sides of clamping arm	≈ 0.05 g
Clamp arm pin hole part	≈ 0.10 g
Clamp arm cam ditch part	≈ 0.50 g

2) There is thinly no irregularity and lithium system grease is spread on the slash part in pin B and the piston rod slit part (both sides).
Moreover, there is no irregularity and lithium system grease is spread on the piston rod pin hole part a lot (Grease can collect).
Do not damage the finger etc. for the acute angle when you spread grease on the piston rod slit part.

Grease application amount (standard)

Pin B	≈ 0.05 g
Piston rod slit part	≈ 0.05 g
Piston rod pin hole part	≈ 0.10 g

3) Insert the clamp arm (with spatter cover) in the piston rod slit part and insert pin B.
Insert the cotter pin for the exchange through the hole for the cotter pin of pin B, and bend the point with the needle rose pliers.

4) Rotate the clamp arm, and rotate it so that the A-D installation position may squarely become direction of the fingernail.
(Rotate it while moving the piston rod up and down when it rotates.)

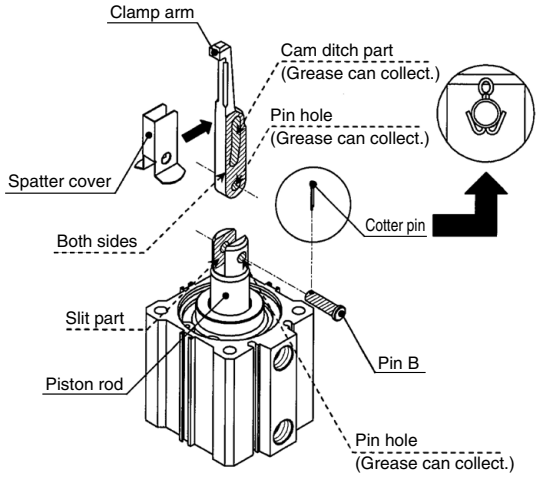

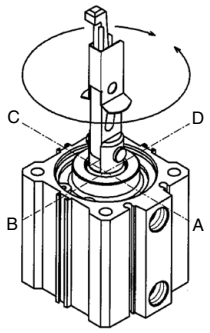

c. Mounting of the guide pin assembly

1) Put into the state to draw out the piston rod, confirm the body installation side and the clamping arm fingernail position, and insert the body.
There is thinly no irregularity and lithium system grease is spread on the slash part of pin A.
There is no irregularity and lithium system grease is spread on the body side hole part (pin A insertion part) a lot (Grease can collect).
Insert pin A from the body side hole through the spatter cover and the clamp arm (Refer to a detail chart).

Grease application amount (standard)

Pin A	≈ 0.05 g
Body side hole part	≈ 0.20 g

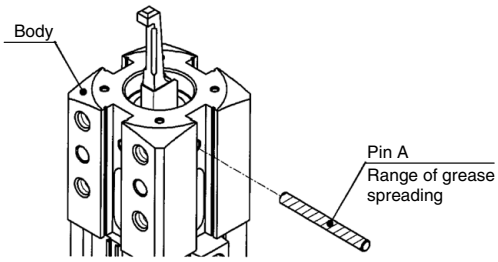

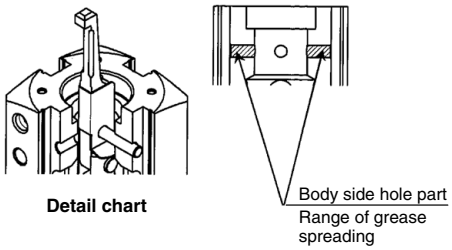

2) Fasten, in order, the spring washer (4 pcs.) and the hexagon socket head cap screw (4 pcs.) from the head side of the base cylinder.
Tightening torque: 4 to 6 (N·m)

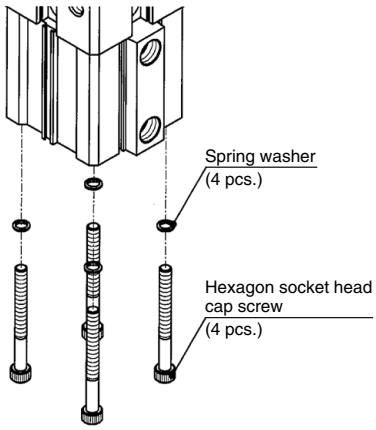

3) Install the cover (4 pcs.) on the body. In that case, please note the direction of insertion.

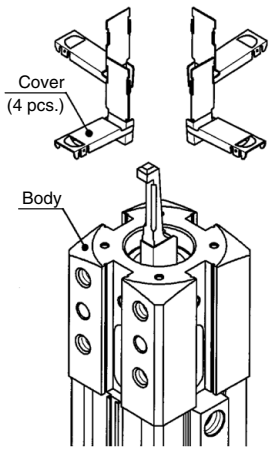

4) After cleaning the adhesive from the hexagon head bolts (4 pcs.) and the body with alcohol etc., apply the tightening adhesive to the screw holes of the body (SMC recommended adhesive: Loctite Corp. 242 [Blue]) in order not to loose. Please install the guide tube in the body with the hexagon head bolt (4 pcs.).
In that case, install it so the guide tube pin hole is on the right side of the clamp arm (detail chart).
Tightening torque: 1.5 to 1.8 (N·m)
Please confirm whether the adhesive has overflowed after concluding the hexagon head bolt (4 pcs.).
Wipe an extra adhesive off when overflowing.

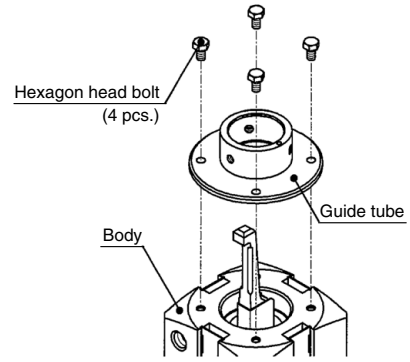

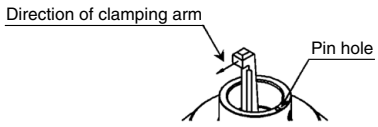

Detail chart

5) Insert the parallel pin for the exchange in the pin hole of guide pin assembly for the exchange, (when equipped with a shim, adhesive to secure the parallel pin to the guide pin assembly) suit to the position of the pin hole on the guide tube side, insert, and tighten with the hexagon socket set screw (3 pcs.: [green] with the adhesive).
Tightening torque: 4.86 to 5.94 (N·m)
However, when the adhesive color of the hexagon socket set screw (3 pcs.) is “red”, or the “green” adhesive is stripped off from repeated replacements, completely remove the remaining adhesive from the thread of the hexagon socket set screw and the screw hole of the guide tube with alcohol. Then apply tightening adhesive (SMC recommendation: Loctite Corp. 243 [Blue]) to the hexagon socket set screw (3 pcs.).
Please confirm whether the adhesive has overflowed after it concludes it.
Wipe an extra adhesive off when overflowing.

For the with shim type, insert the shim between the guide pin assembly and the guide tube.
Install the order of shim referring to the following.
Please confirm shim does not dash out from the guide tube outer after assemble.

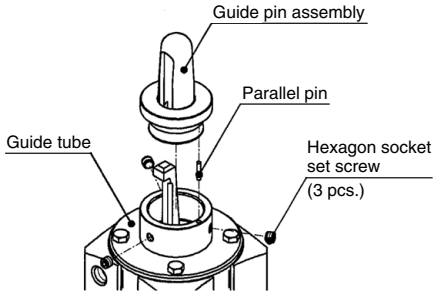

Without shim

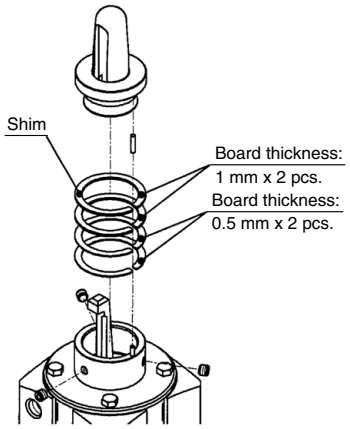

With shim

The clamping position height: For the HIGH type

1. Disassembly of the clamping part
   a. Cleaning of the appearance
      Wipe off the dirt of appearance to prevent intrusion of dust and foreign objects during disassembly.
   b. Removal of the guide pin assembly
      Adjust the position of the clamp arm to the unclamping side, detach the hexagon socket set screw (3 pcs.), and guide pin assembly from the guide tube.
      Detach the parallel pin which does a positional match of the guide tube and guide pin assembly.

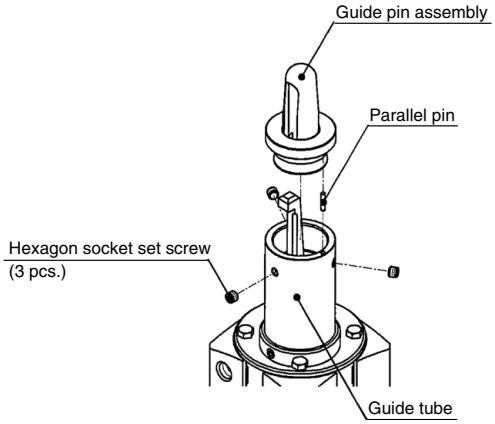

   c. Removal of the clamp arm
      1) Detach the hexagon socket set screw, and detach the ring from the guide tube.
         Detach pin A from the guide tube side hole.

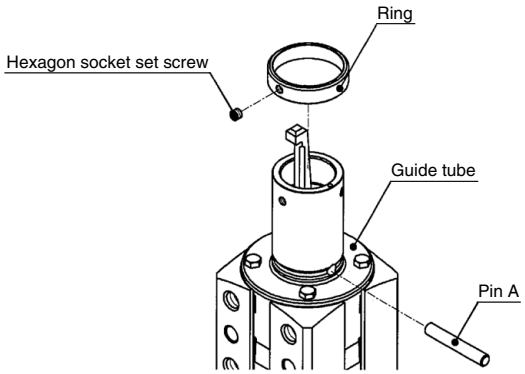

      2) Detach the hexagon head bolt (4 pcs.), and detach the guide tube and spatter cover from the body.

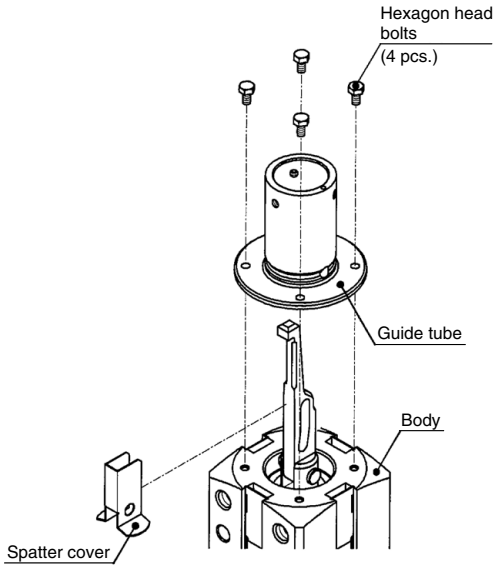

      3) Insert a flat head screwdriver or similar object into the cover groove and open. Then detach the cover (4 pcs.).
         Pay attention to cut neither the hand nor the finger, etc. when you detach the cover.

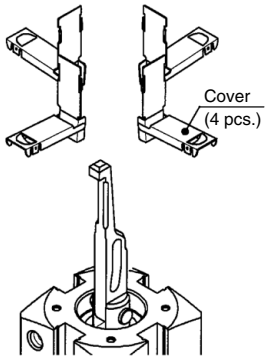

4) Loosen the hexagon socket head cap screw (4 pcs.) of the base cylinder, and detach the body from the base cylinder.

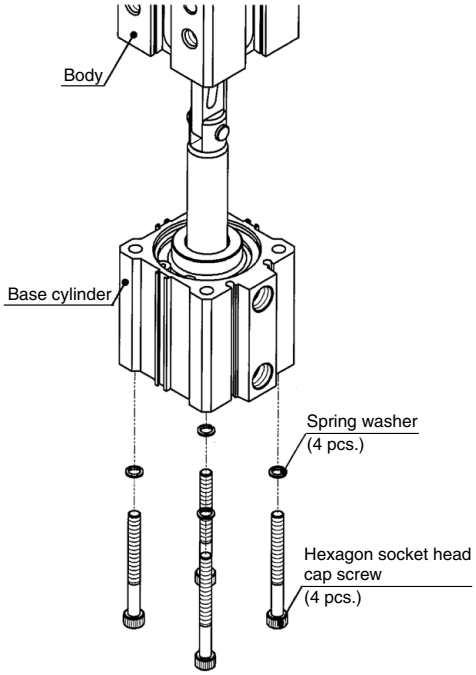

5) Extract the cotter pin, detach pin B, and detach the clamp arm.

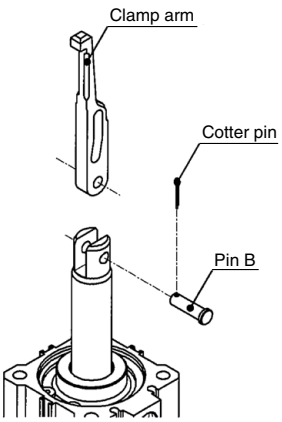

2. Reassembly of the clamping part

a. Check the part number.

Check the number printed on clamp arm and guide pin assembly with reference to the following table.

	Printed no.	
	Guide pin assembly	Clamp arm
Applicable combination	125, 127, 128, 129, 130	13
	145, 147, 148, 149, 150	15-16
	155, 157, 158, 159, 160	15-16
	175, 177, 178, 179, 180	18
	195, 197, 198, 199, 200	20
	245, 247, 248, 249, 250	25
	295, 297, 298, 299, 300	30

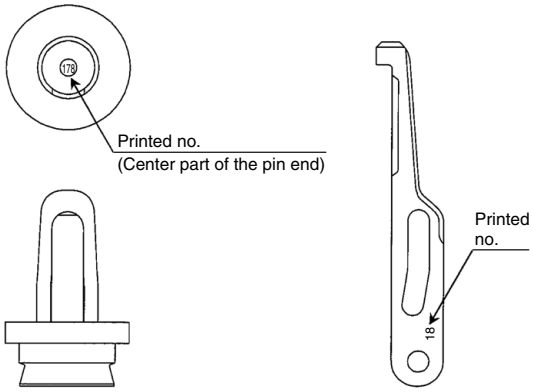

Guide pin assembly **Clamp arm**

b. Installation of the clamp arm

1) There is thinly no irregularity and lithium system grease is spread on the slash part of the clamp arm for the exchange (both sides).
Moreover, there is no irregularity and lithium system grease is spread on the pin hole part and the cam ditch part a lot (Grease can collect).

Grease application amount (standard)

Both sides of clamp arm	≈ 0.05 g
Clamp arm pin hole part	≈ 0.10 g
Clamp arm cam ditch part	≈ 0.50 g

2) There is thinly no irregularity and lithium system grease is spread on the slash part in pin B and the piston rod slit part (both sides).
There is no irregularity and lithium system grease is spread on the piston rod pin hole part a lot (Grease can collect).
Do not damage the finger etc. in the slit part for the acute angle when you spread grease on the piston rod slit part.

Grease application amount (standard)

Pin B	≈ 0.05 g
Piston rod slit part	≈ 0.05 g
Piston rod pin hole part	≈ 0.10 g

3) Insert the clamp arm in the piston rod slit part and insert pin B.
   Insert the cotter pin for the exchange through the hole for the cotter pin of pin B, and bend the point with the radio pincers.
4) Rotate the clamp arm, and rotate it to become it at right angles with the A-D installation position and the direction of the fingernail.
   (Rotate it while moving the piston rod and down when it rotates.)

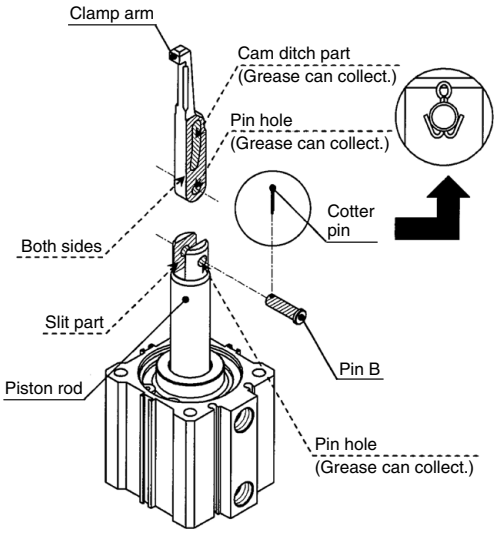

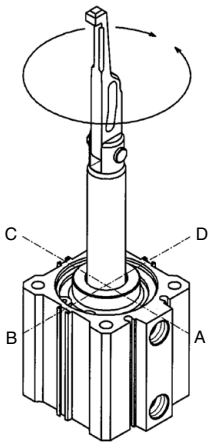

c. Mounting of the guide pin assembly
   1) Put into the state to draw out the piston rod, confirm the body installation side and the clamp arm fingernail position, and insert the body.
      Fasten, in order, the spring washer (4 pcs.) and the hexagon socket head cap screw (4 pcs.) from the head side of the base cylinder.
      Tightening torque: 4 to 6 (N·m)

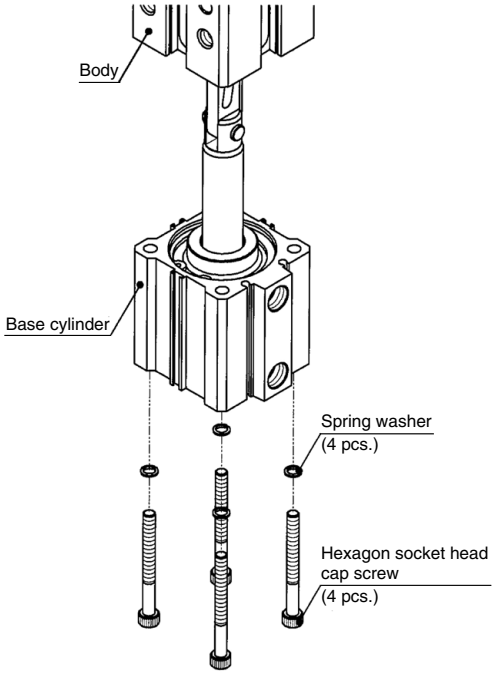

   2) Install the cover (4 pcs.) on the body. In that case, please note the direction of insertion.

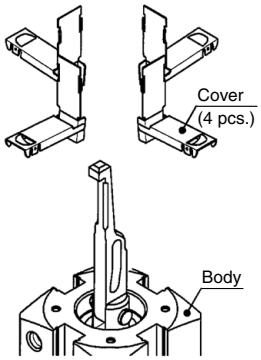

   3) After cleaning the adhesive from the hexagon head bolts (4 pcs.) and the body with alcohol etc., apply the tightening adhesive to the screw holes of the body (SMC recommended adhesive: Loctite Corp. 243 [Blue]) in order not to loose.
      Spread lithium system grease on the pin hole part of pin A and the guide tube.

Grease application amount (standard)

Pin A	≈ 0.05 g
Guide tube pin hole part	≈ 0.10 g

Install the spatter cover (The direction is noted) in the clamp arm.
In that case, install it so that the pin hole of the spatter cover and the cam groove of the clamp arm are visible.
Insert the guide tube in the body.
In that case, install it so the guide tube pin hole is on the right side of the clamp arm (detail chart).
Insert pin A from the guide tube side hole through the spatter cover and the clamp arm (Refer to detail chart 2).
Install it with the hexagon head bolt (4 pcs.) after inserting pin A. Tightening torque: 1.5 to 1.8 (N·m).
Please confirm whether the adhesive has overflowed after concluding the hexagon head bolt (4 pcs.).
Wipe an extra adhesive off when overflowing.

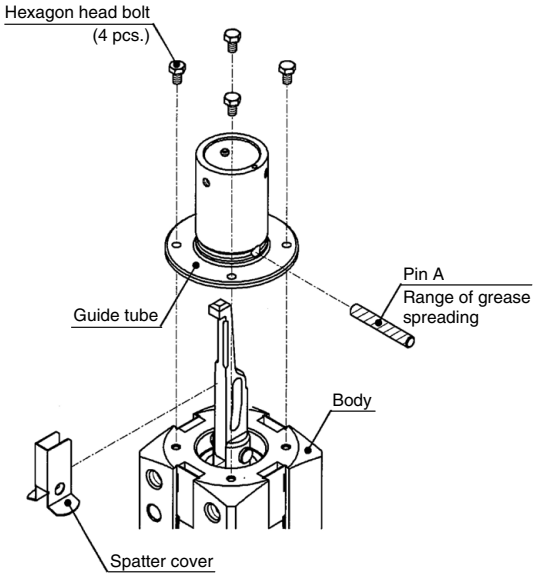

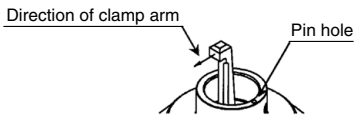

Detail chart 1

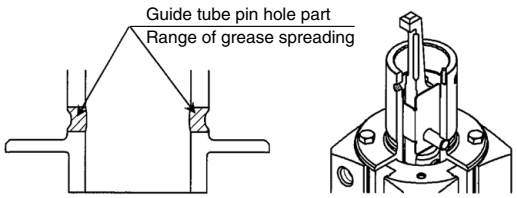

Detail chart 2

4) Insert the ring in the guide tube and install it with a hexagon socket set screw (with the adhesive [Green]).
Align the screw hole position of the ring to the same direction of the clamp arm claw and tighten.
(Refer to the figure below.)
Tightening torque: 1.5 to 1.8 (N·m)
However, when the adhesive color of the hexagon socket set screw is “red”, or the “green” adhesive is stripped off from repeated replacements, completely remove the remaining adhesive from the thread of the hexagon socket set screw and the screw hole of the guide tube with alcohol. Then apply tightening adhesive (SMC recommendation: Loctite Corp. 243 [Blue]) to the hexagon socket set screw.
Please confirm whether the adhesive has overflowed after it concludes it.
Wipe an extra adhesive off when overflowing.

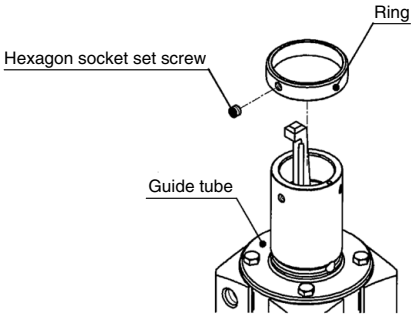

5) Insert the replacement parallel pin in the pin hole of the replacement guide assembly (when equipped with a shim, secure with adhesive on the parallel pin and the guide pin assembly), line up with the pin hole on the guide tube, insert, and tighten with the hexagon socket set screw (3 pcs.: with the adhesive [Green]).
Tightening torque: 4.86 to 5.94 (N·m)
However, when the adhesive color of the hexagon socket set screw (3 pcs.) is “red”, or the “green” adhesive is stripped off from repeated replacements, completely remove the remaining adhesive from the thread of the hexagon socket set screw and the screw hole of the guide tube with alcohol. Then apply tightening adhesive (SMC recommendation: Loctite Corp. 243 [Blue]) to the hexagon socket set screw (3 pcs.).
Please confirm whether the adhesive has over flowed after it concludes it.
Wipe an extra adhesive off when overflowing.

For type with shim, insert the shim between the guide pin assembly and the guide tube.
Install the order of shim referring to the following.
Please confirm shim does not dash out from the guide tube outer after assemble.

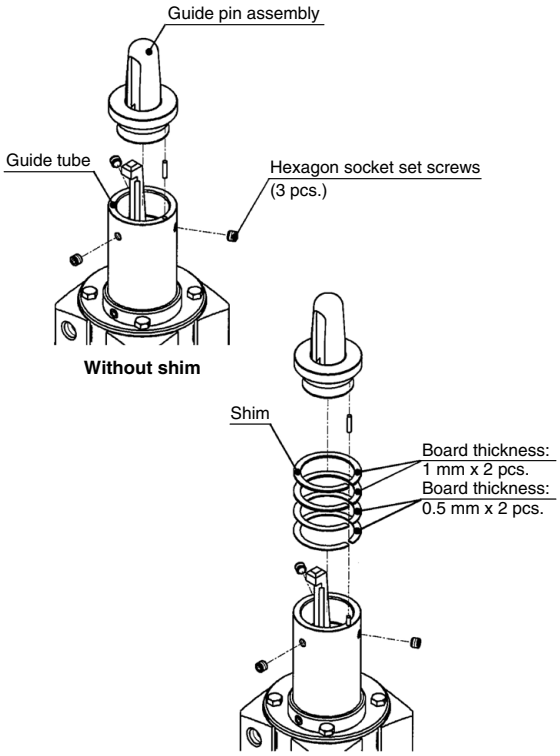

3. Replacement of Seal

(Only for the CKQG/P series because disassemble of CLKQG/P is unacceptable.)

3-1. Disassembly of the base cylinder

a. Cleaning of the appearance

Wipe off the dirt of appearance to prevent intrusion of dust and foreign objects during disassembly.

Intensively, pay attention to surface of the piston rod and collar.

b. Removal of the retaining ring

Use adequate pliers (tool for installing a basic internal retaining ring).

And pay attention not to cause the retaining ring to pop out and damage the human body and peripheral equipments.

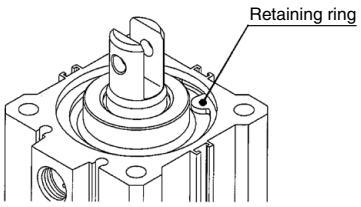

c. Disassembly

Take off the piston rod with collar assembly by pulling out the pin inserted into the hole on the end of piston rod and then remove the collar assembly from the piston rod assembly.

At the time, pay attention not to give any flaw on inner face of the tube and bearing of the collar assembly.

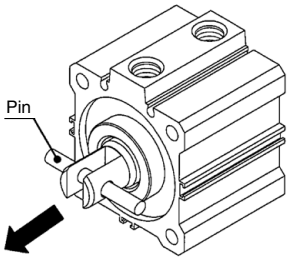

3-2. Removal of the seal

a. Removal of the rod seal

Remove it with a watchmaker's screwdriver inserted from the front of the collar assembly.

Do not give any flaw on the groove of the collar assembly seal.

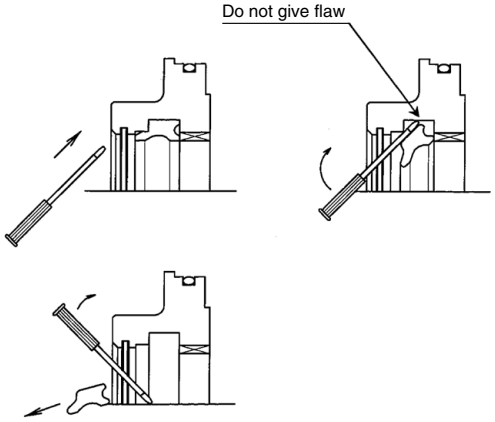

b. Removal of the piston seal

As the piston seal groove is deep, remove the seal using a gap made by squeezing it, not using a precision driver.

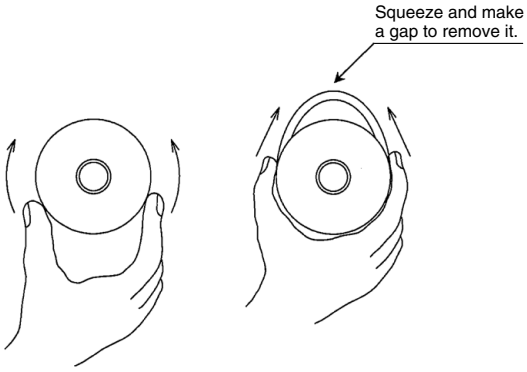

c. Removal of the tube gasket

Push the seal gasket partially to make it come off and pull it out manually.

Squeeze the gasket and make a gap to remove it. (Refer to the above figure.)

3-3. Application of grease

a. Rod seal, piston seal

There is thinly no irregularity and lithium system grease is spread on all surroundings of the rod seal and piston seal for the exchange.

Grease application amount (standard)

Rod seal	≈ 0.10 g
Piston seal	≈ 0.30 g

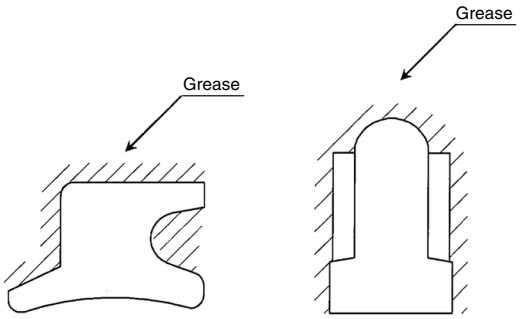

Rod seal **Piston seal**

b. Tube gasket

There is thinly no irregularity and lithium system grease is spread on the whole of the tube gasket for the exchange.

Grease application amount (standard)

Tube gasket	≈ 0.15 g

c. Each components of the cylinder

There is thinly no irregularity and lithium system grease is spread on a specified part of piston rod assembly and cylinder tube assembly.

Grease application amount (standard)

Sliding part and taper of piston rod	L type	≈ 0.20 g
	H type	≈ 0.30 g
Sliding part of cylinder tube		≈ 0.40 g

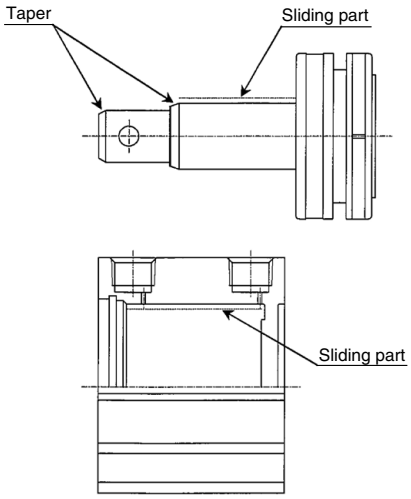

3-4. Mounting of the seal

a. Mounting of the rod seal

Mount the seal with attention to direction.

After installation, apply lithium type grease evenly onto the rod seal and bearing.

Grease application amount (standard)

Rod seal and bearing	≈ 0.25 g

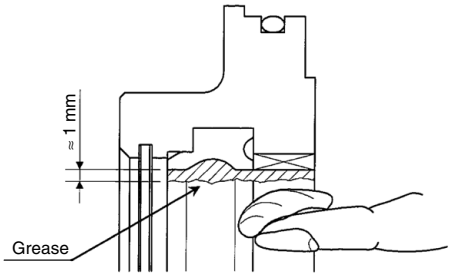

b. Mounting of the piston seal

Mount the piston seal without twist.

Spread it to rub lithium system grease into between piston seal outer part and the ditch after it installs it.

Grease application amount (standard)

Piston packing outer part and ditch	≈ 0.70 g

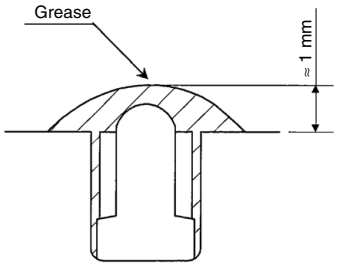

c. Mounting of the tube gasket

Pay attention not to make the gasket come off.

3-5. Reassembly of the cylinder

a. Insertion of the piston rod assembly

Insert it politely slowly so as not to damage rod seal in corner part cylinder tube assembly.

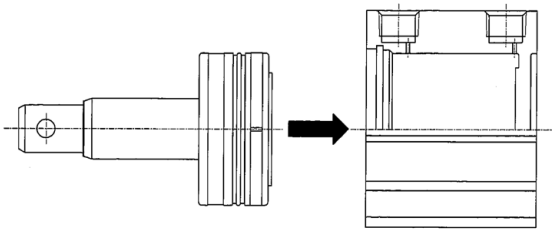

b. Insertion of the color assembly

Damage neither rod packing nor the tube gasket in corner part piston rod assembly and cylinder tube assembly. Insert it politely slowly.

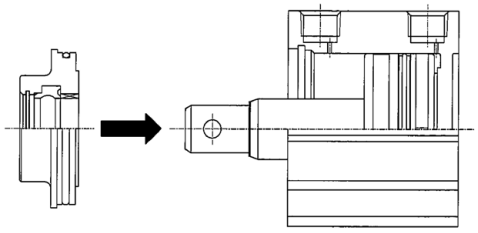

c. Mounting of the retaining ring

Use adequate pliers (tool for installing a basic internal ring).

Mount the retaining ring with attention to direction.

And pay attention not to cause the retaining ring to pop out and damage the human body and peripheral equipments.

After mounting, confirm the retaining ring is secured firmly by the mating hole.

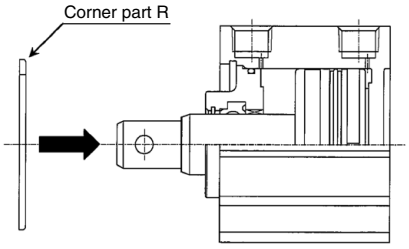

d. Check of the reassembly condition

Confirm there is no air leakage from seal etc. and the cylinder can be moved smoothly at a min. operating pressure.

1. Replacement of the Guide Pin and Clamp Arm

The clamping position height: For the LOW type

1-1. Disassembly of the clamping part

a. Cleaning of the appearance
Wipe off the dirt of appearance to prevent intrusion of dust and foreign objects during disassembly.

b. Removal of the guide pin
Adjust the position of the clamp arm to the unclamping side, detach the hexagon socket head cap screw (4 pcs.), and guide pin from guide tube. Screw-locking adhesive is applied on the threaded part of the hexagon socket head cap screws. If there is any adhesive residue leftover on the threaded part on guide tube side, be sure to remove it.

(Same for the HIGH type)

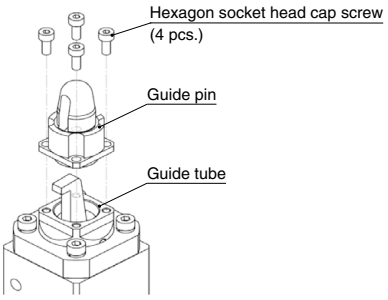

c. Removal of the clamp arm

1) Remove the hexagon socket head cap screws (4 pcs.), and then remove the top cover from the body. Remove pin B from the guide tube side surface hole.

(For the HIGH type, remove the retaining ring before removing pin B.)

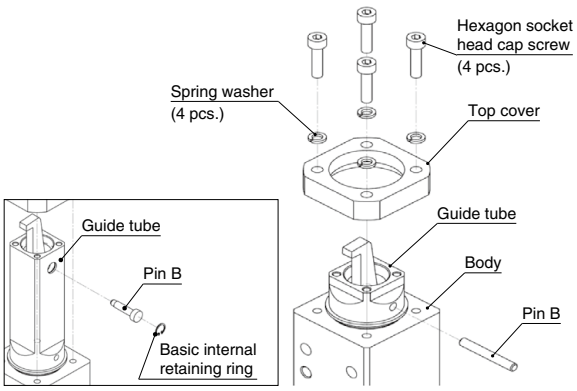

2) Remove the guide tube from the body. At this time, be careful not to lose the spring pin for body and guide tube positioning. (It does not have to be removed.)

(LOW type)

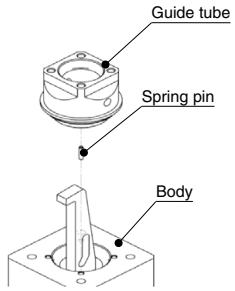

3-1) <Without lock>
Loosen the hexagon socket head cap screw (4 pcs.) the base cylinder, and detach the body from the base cylinder.

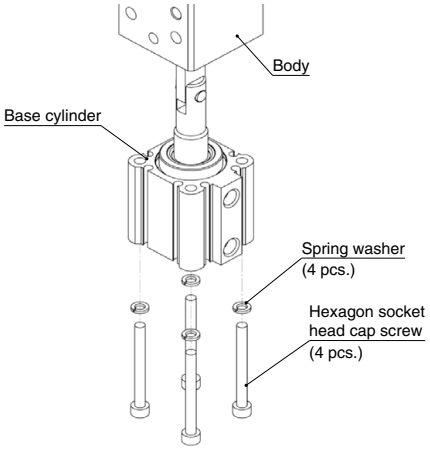

3-2) <With lock>
There are 2 hexagon socket head cap screws to be loosened. Be aware that their position is predetermined.
Do not under any circumstances loosen the lock unit holding bolt.

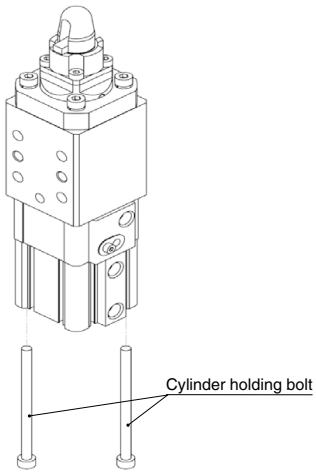

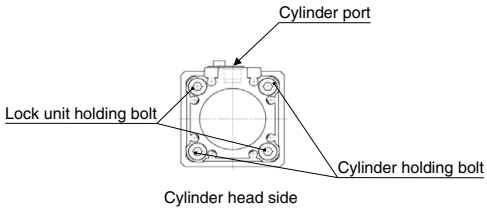

(HIGH type)

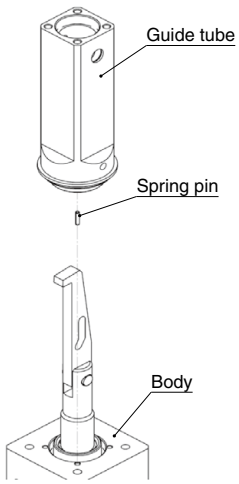

4) Remove the connection pin, and then remove the clamp arm.

(Same for the HIGH type)

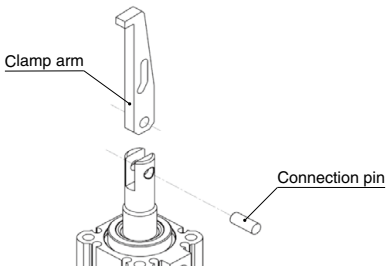

2. Reassembly of the clamping part
   a. Installation of the clamp arm
      1) There is thinly no irregularity and lithium system grease is spread on the slash part of the clamp arm for the exchange (both sides). Moreover, there is no irregularity and lithium system grease is spread on the pin hole part and the cam ditch part of the clamping arm a lot (Grease can collect).
      2) There is thinly no irregularity and lithium system grease is spread on the slash part in connection pin and the piston rod slit part (both sides). Moreover, there is no irregularity and lithium system grease is spread on the piston rod pin hole part a lot (Grease can collect).
      3) Insert the clamp arm in the piston rod slit part and insert connection pin.
      4) Rotate the clamp arm, and rotate it so that the A-D installation position may squarely become direction of the fingernail. (Rotate it while moving the piston rod up and down when it rotates.)

(Same for the HIGH type)

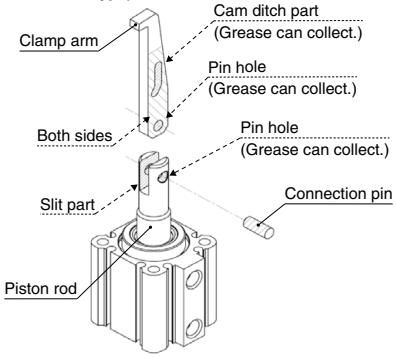

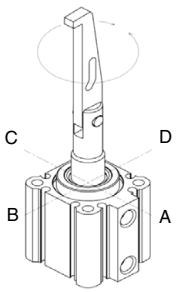

   b. Mounting of the guide pin
      1) Put into the state to draw out the piston rod, confirm the body installation side and the clamping arm fingernail position, and insert the body.
      2) Fasten, in order, the spring washer (4 pcs.) and the hexagon socket head cap screw (4 pcs.) from the head side of the base cylinder. Tightening torque: 2.7 to 3.3 (N·m)

(LOW type)

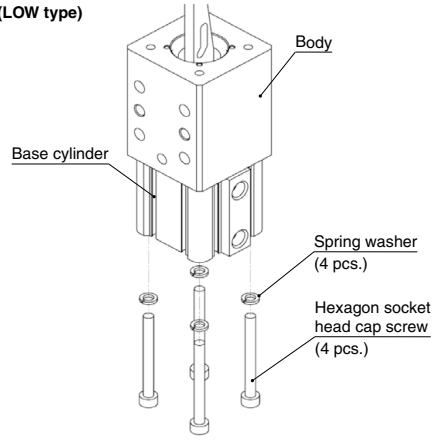

3) Insert the spring pin into the guide tube pin hole. (If it was removed earlier.)
Rotate the guide tube so that it is square with the guide tube side hole part (pin B insertion part) and the clamp arm claw direction, and then insert it, lining it up with the pin hole on the body side.

(Same for the HIGH type)

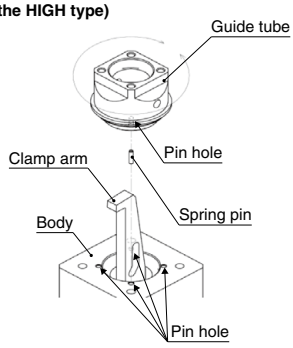

4) There is thinly no irregularity and lithium system grease is spread on the slash part of pin B.There is no irregularity and lithium system grease is spread on the guide tube side hole part (pin B insertion part) a lot (Grease can collect).Insert pin B into the guide tube. Install the replacement retaining ring using suitable pliers (tool for installing a basic internal retaining ring). In addition, confirm that the retaining ring fits securely in the retaining ring groove. (If not installed correctly, pin B will come out if pushed from the opposite side. Be sure to confirm the installation state before continuing.)
Mount the top cover to the body by mounting the spring washers (4 pcs.) and the hexagon socket head cap screws (4 pcs.) in that order.
Tightening torque: 2.7 to 3.3 (N·m)

(Same for the HIGH type)

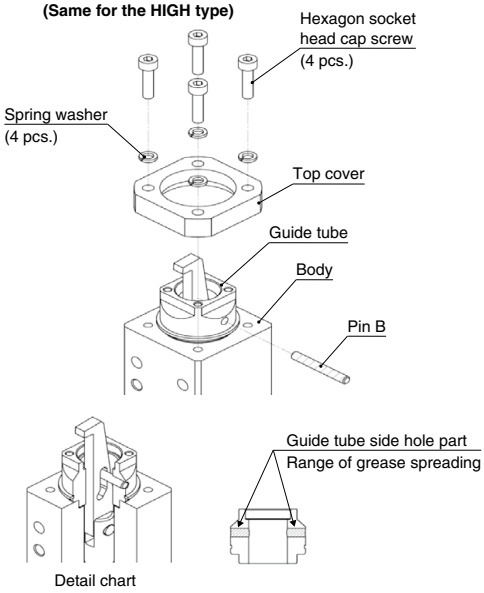

For the HIGH type, be sure to install a retaining ring to pin B to keep it from coming out.
Install the replacement retaining ring using suitable pliers (tool for installing a basic internal retaining ring). In addition, confirm that the retaining ring fits securely in the retaining ring groove. (If not installed correctly, pin B will come out if pushed from the opposite side. Be sure to confirm the installation state before continuing.)

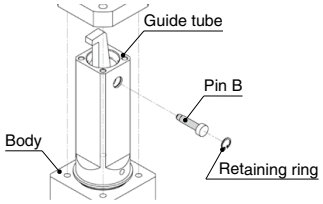

5) Mount the replacement guide pin to the guide tube with the hexagon socket head cap screws (4 pcs.).
Tightening torque: 1.35 to 1.65 (N·m)
When the screw-locking adhesive on the hexagon socket head cap screws has worn down due to multiple guide pin replacements, we recommend reapplying adhesive. (SMC's recommended adhesive: Loctite 243 (blue))

(Same for the HIGH type)

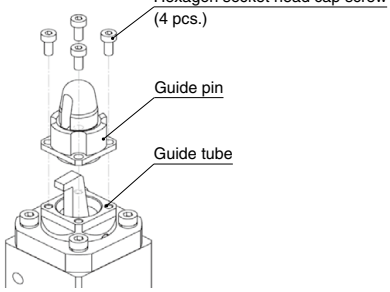

1. Disassembly and Assembly of the Cylinder

Disassemble and assemble the cylinder in a clean area. Perform on a clean cloth.

For the RSG series, hold the flats of the tube cover gently in a vice, and hold the flats of the head cover with a wrench or monkey wrench to loosen and remove the head cover. When reassembling, tighten it 2 degrees further than the pre-disassembly position.

For the RSQ series, after securing the tube and cover with the holding screws, secure them with the hexagon socket head set screws. To disassemble, loosen the set screw that is screwed into the tube, hold the tube gently in a vice, and hold the flats of the rod cover with a wrench or monkey wrench to loosen and remove the cover. When reassembling, after tightening it 2 to 3 degrees further than the pre-disassembly position, secure the cover with the set screws.

2. Removal of the Seal

2-1. Rod seal

Tool: A watchmaker's screwdriver, etc.

Insert a precision screwdriver from the front side of the cover as shown in Figure 1.

At this time, exercise care not to damage the packing groove of the cover.

2-2. Piston seal

Wipe off grease around the piston seal first to make removal easier.

Hold the piston seal with one hand and push it into groove so that piston seal can be lifted off and pulled out without using a watchmaker's screwdriver. (Fig. 2)

2-3. Tube gasket

Remove the tube gasket with a watchmaker's screwdriver or the like.

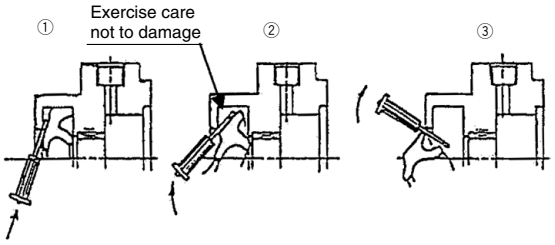

Fig. 1 Removal of the rod seal

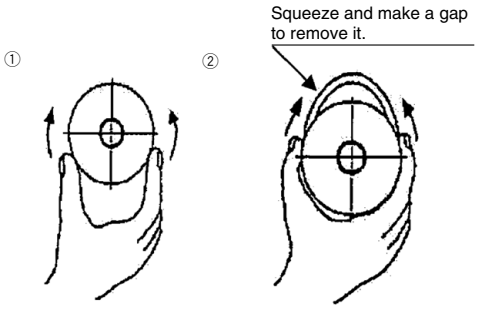

Fig. 2 Removal of the piston seal

3. Application of Grease

3-1. Rod seal

Thinly apply grease to the periphery of a new seal before replacement. Grease will help tight fitting to the cover.

Fill the seal groove with grease for smooth movement. (Fig. 3)

3-2. Piston seal

Apply grease thinly and evenly to the external and internal peripheries of the piston seal to ensure easy fitting to the piston.

3-3. Tube gasket

Thinly apply grease to the tube gasket. Grease will help prevention of dropping off during fitting the cylinder.

3-4. Cylinder parts

Apply grease to all points of cylinder parts as shown in Fig. 4.

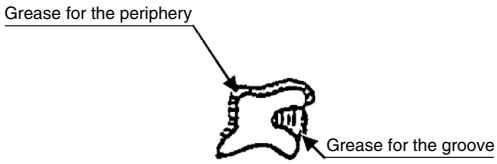

Fig. 3

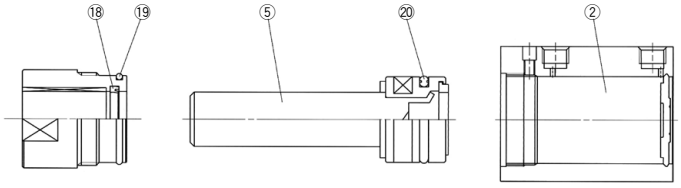

Fig. 4 Grease application points

4. Mounting of the Seal

4-1. Rod seal
Mount the rod seal in the correct direction. After this, apply grease to the seal and the entire internal periphery of the bushing as shown in Fig. 5. For small diameter cylinders, apply grease with a watchmaker' screwdriver.

4-2. Piston seal
After mounting the seal, apply grease to the inner and outer peripheries of the seal groove while rubbing it by finger as shown in Fig. 6.

4-3. Tube gasket
Mount the tube gasket on the cover.

After completion of installation, check the cylinder for smooth manual movement. Moreover, the procedure will be finished after checking a leakage from the seal.

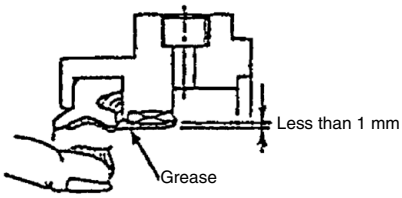

Fig. 5 Rod seal

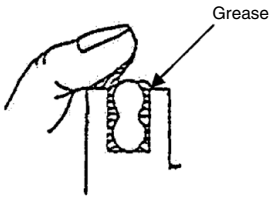

Fig. 6 Piston seal

5. Replacement of the Shock Absorber

5-1. Loosen the hexagon socket head set screw (M3) at the piston rod by approximately one turn, and push down the lever. (See Fig. 7)
Tool: A hexagon wrench, Width across flats 1.5 mm

Replacement Parts: Shock Absorber

Bore size (mm)	Part no.
32	RB1007–X225
40·50	RB1407–X552

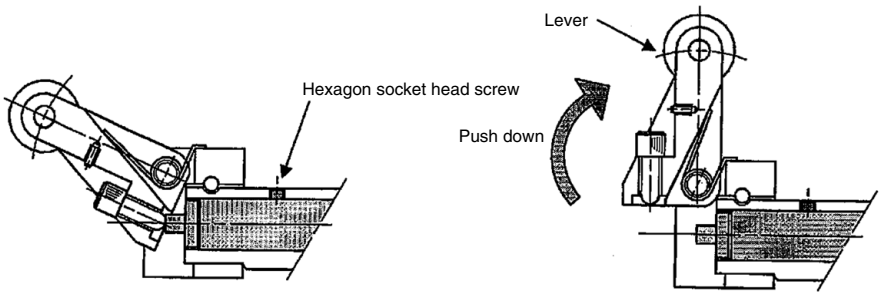

Fig. 7

5-2. While pushing down the lever, remove the shock absorber and replace it with a new shock absorber.
Tighten the hexagon socket set screw (M3 x 0.5) of the piston rod. Stop tightening around 1/4 turn after the set screw comes into contact with the shock absorber.
If it is tightened too much, it may cause damage to the hexagon socket set screw or a malfunction of the shock absorber.
Tightening torque: 0.29 N·m
Tool: A hexagon wrench, Width across flats 1.5 mm

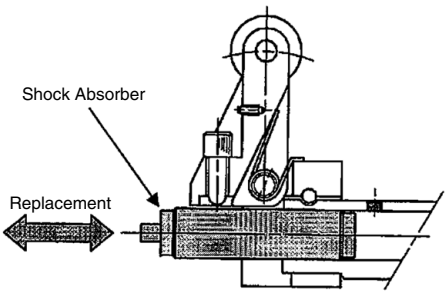

Fig. 8

1. Replacement of the Seal

The piston seal, cylinder tube gasket, O-ring of the RSH/RS2H series can be replaced. The scraper of the RSH series can be replaced.
Contact SMC sales representatives if it is necessary to replace parts other than those mentioned above.

⚠Caution

When replacing the seals, take care not to hurt your hand or finger on the corners of parts.

2. Disassembly/Reassembly

⚠Caution

Disassemble and assemble the cylinder in a clean area. Perform on a clean cloth.

When disassembling the cylinder, loosen the hexagon socket head cap screws (ø20: 2 pcs., ø32 to ø80: 4 pcs.) with a hexagon wrench. Remove the rod cover and piston rod from the cylinder tube as Fig.1
When reassembling, apply locking adhesive on the hexagon socket head cap screws and tighten them.

- Hexagon socket head cap screw tightening torque
  ø20: 3.0 N·m
  ø32: 5.2 N·m
  ø50: 12.5 N·m
  ø63: 24.5 N·m
  ø80: 42.0 N·m

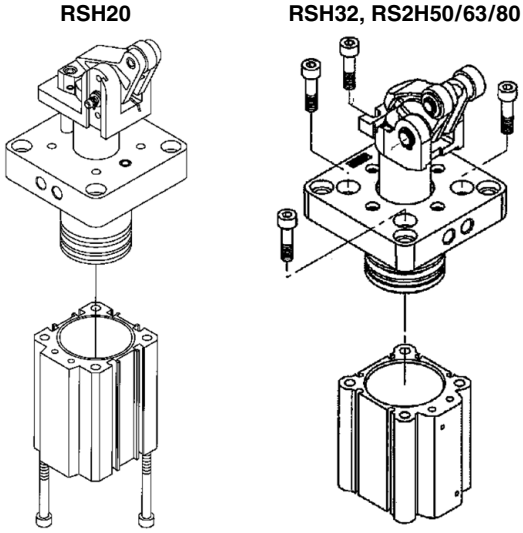

Fig. 1

3. Removal of the Seal

3-1. Piston seal
Wipe off grease around the piston seal first to make removal easier.
Hold piston seal with one hand and push it into groove so that piston seal can be lifted off and pulled out without with a watchmaker's screwdriver. (Fig. 2)

3-2. Tube gasket
Remove the tube gasket with a watchmaker's screwdriver or the like.

3-3. O-ring
Remove the tube gasket with a watchmaker's screwdriver or the like.

3-4. Scraper (RSH series only)
Remove the scraper by inserting a watchmaker's screwdriver or the like. Take care not to damage the seal groove of the cover at this time.

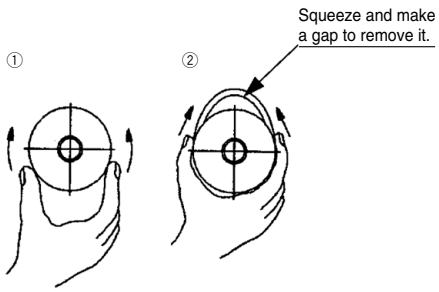

Fig. 2

4. Grease Application

⚠Caution

Use our recommended grease.
Grease pack no.: GR-S-010 (10 g)**, GR-S-020** (20 g)

4-1. Piston seal (RSH, RS2H: No.37)
Lightly and evenly apply grease to the inner and outer circumferences for easier mounting on the piston.

4-2. Tube gasket (RSH: No.40, RS2H: No.39)
Lightly apply grease. This prevents its drop when assembling the cylinder.

4-3. O-ring (RSH: No.41, RS2H: No.40)
Lightly apply grease. This prevents its drop when assembling the cylinder.

4-4. Scraper (RSH: No.39)
Apply a little grease to the outer circumference of the new seal for replacement. This improves mounting and adhesion of the seal to the cover.

4-5. Cylinder component parts
Apply grease to each component parts of the cylinder in Fig. 3.

RSH20/32

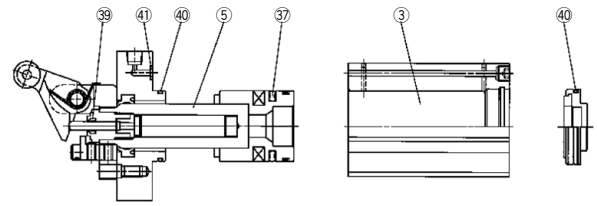

RS2H50/63/80

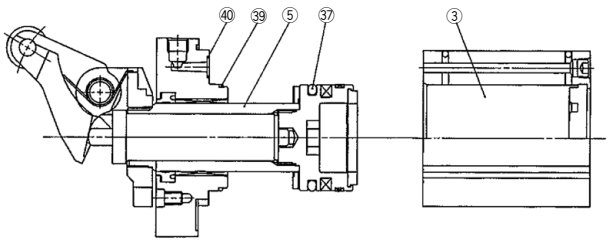

Fig. 3

5. Mounting of the Seal

5-1. Piston seal
After mounting the seal, apply grease to the inner and outer peripheries of the seal groove while rubbing it by finger as shown in Fig. 4.

5-2. Tube gasket
Mounted to the cover. (For the RSH series, tube gasket is mounted to the bottom plate, too.)

5-3. O-ring
Apply the O-ring to the cover.

5-4. Scraper
Mount the scraper in the correct direction.
Apply grease to the inner circumference of the seal using something, such as a precision screwdriver.

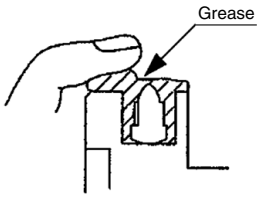

Fig. 4

⚠Caution

Confirm that there is no problem with operation and air tightness after assembly.

6. Replacement of the Shock Absorber

~RSH Series (Fig. 5)~

6-1. Loosen the 2 hexagon socket head set screws of the stopper and the shock absorber set screw to remove the stopper from the lever holder.

6-2. Push down the lever 90 degrees and loosen the adjusting dial to remove it.

6-3. Pull out the shock absorber and replace it with a new shock absorber.

6-4. After tightening the adjusting dial, fix the stopper with hexagon socket head cap screws. Before fixing the stopper with hexagon socket head cap screws, apply adhesive to the screws.

• Hexagon socket head cap screw tightening torque: 1.5 N·m

6-5. Fix the shock absorber with a set screw.

• Set screw tightening torque: 1.5 N·m

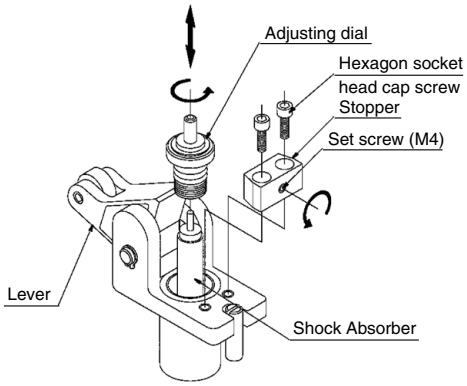

Fig. 5

~RS2H Series (Fig. 6)~

6-1. Loosen the set screw (M4) of the lever holder which fixes the shock absorber. Push down the lever 90 degrees to pull out the shock absorber.

6-2. Fix the shock absorber with a set screw.

• Set screw tightening torque: 1.5 N·m

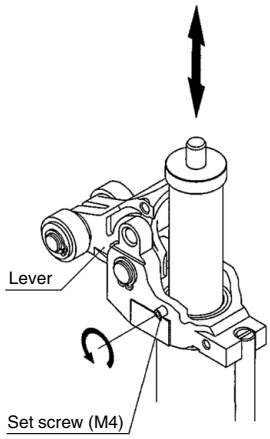

Fig. 6

⚠ Caution

After replacing the shock absorber, tighten the set screw firmly and apply grease to the shock absorber rod end surface (Fig.7).

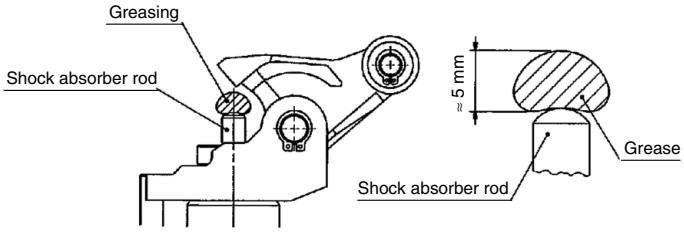

Fig. 7

1. Replacement of the Finger

1-1. Remove the hexagon socket head cap screws.
1-2. Remove the cover.
1-3. Replace the finger.
  a. Apply the specified grease to the finger, body, cover and T groove part of the finger.
  b. Insert the piston in the T groove so that it will be hooked there.
1-4. Fix the cover and tighten the hexagon socket head cap screws.

Bore size	Hexagon socket head cap screw	Hexagon width across flats	Tightening torque (N·m)
8	M2 x 6	1.5	0.24
12	M2.5 x 6	2	0.36
20	M4 x 10	3	1.5
25	M5 x 14	4	3.0
32	M6 x 15	5	5.2

Note) For assembly, apply Henkel Japan Loctite No.243 or equivalent adhesive and tighten with the specified tightening torque.
Please consult SMC if you feel replacement is difficult.

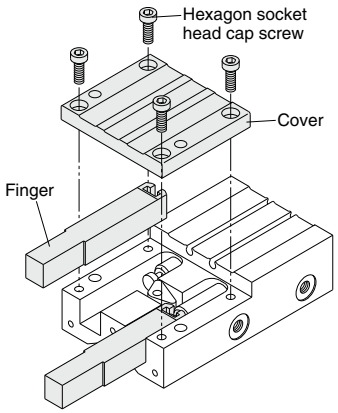

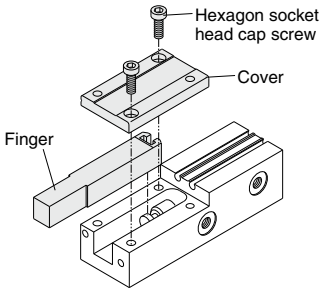

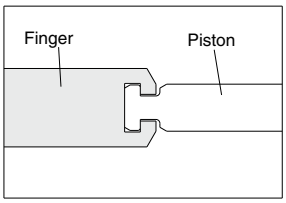

Finger and position connection

2. Replacement of the Seal

2-1. Remove the cover and the finger. (Refer to the "Replacement Procedure of Finger.")
2-2. Loosen the hexagon socket set screws. (Refer to the table of hexagon socket set screw size).
  ∗ For MIS, hexagon socket set screw is not included except for the stroke adjusting type.
2-3. Remove the retaining ring with spring pliers to remove the cap.
  ∗ If there are any questions for ø8, please consult SMC.

Bore size	Hexagon socket set screw	Hexagon width across flats	Tightening torque (N·m)
8	M2 x 6	0.9	0.176
12	M2 x 6	0.9	0.176
20	M3 x 8	1.5	0.63
25	M4 x 8	2	1.5
32	M4 x 8	2	1.5

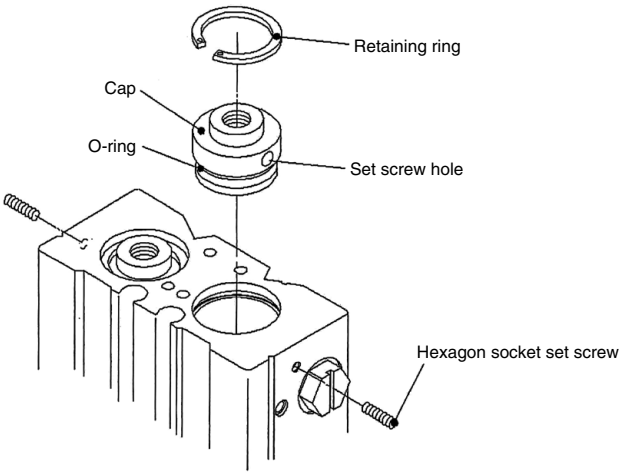

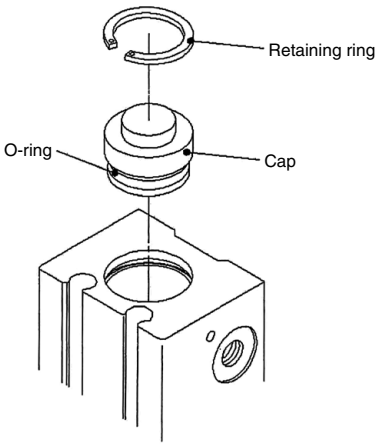

2-4. Take out the piston assembly and replace the seal, to which the specified grease is applied.

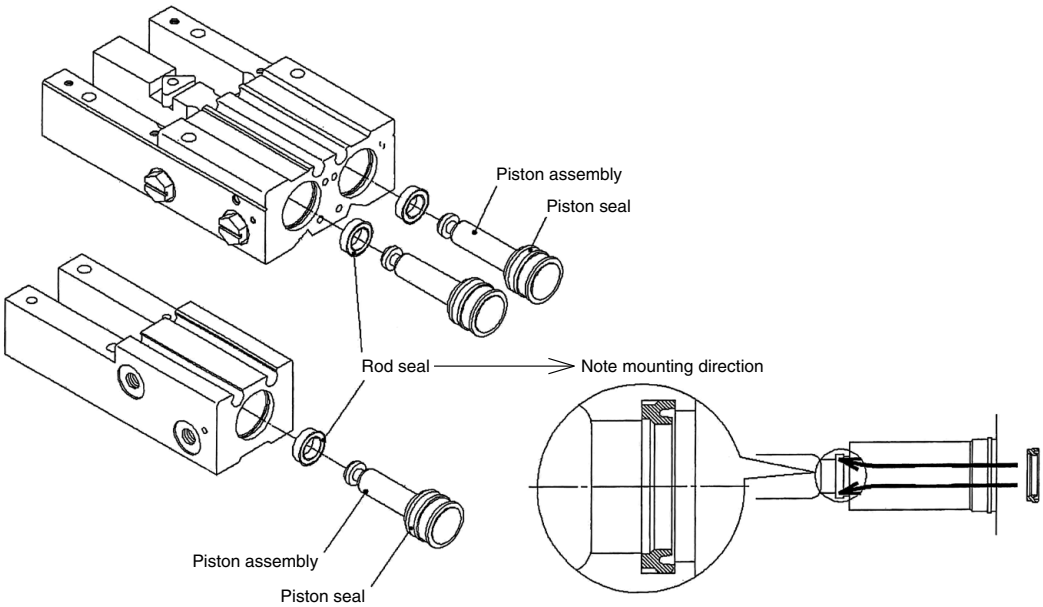

2-5. Apply the specified grease lightly to the sliding interface between the outer periphery and the body of the piston, and assemble them in the reversed order.

3. Scraper Option

⚠Caution

1-1. **Please observe the specified torque limits when mounting a scraper.**
A tightening torque above the specified limits can cause a damage, while tightening torque below the specified limits can cause a dislocation or drop off.

Tightening torque

Model	Bolt (N·m)
MIW8	0.176
MIS8	
MIW12	0.36
MIS12	
MIW20	0.63
MIS20	
MIW25	0.63
MIS25	
MIW32	1.5
MIS32	

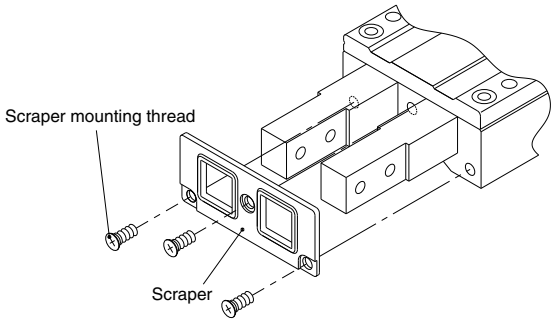

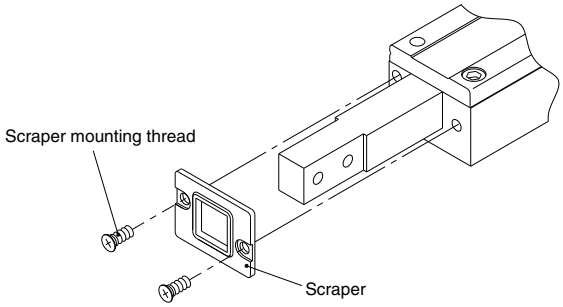

1. Exploded View

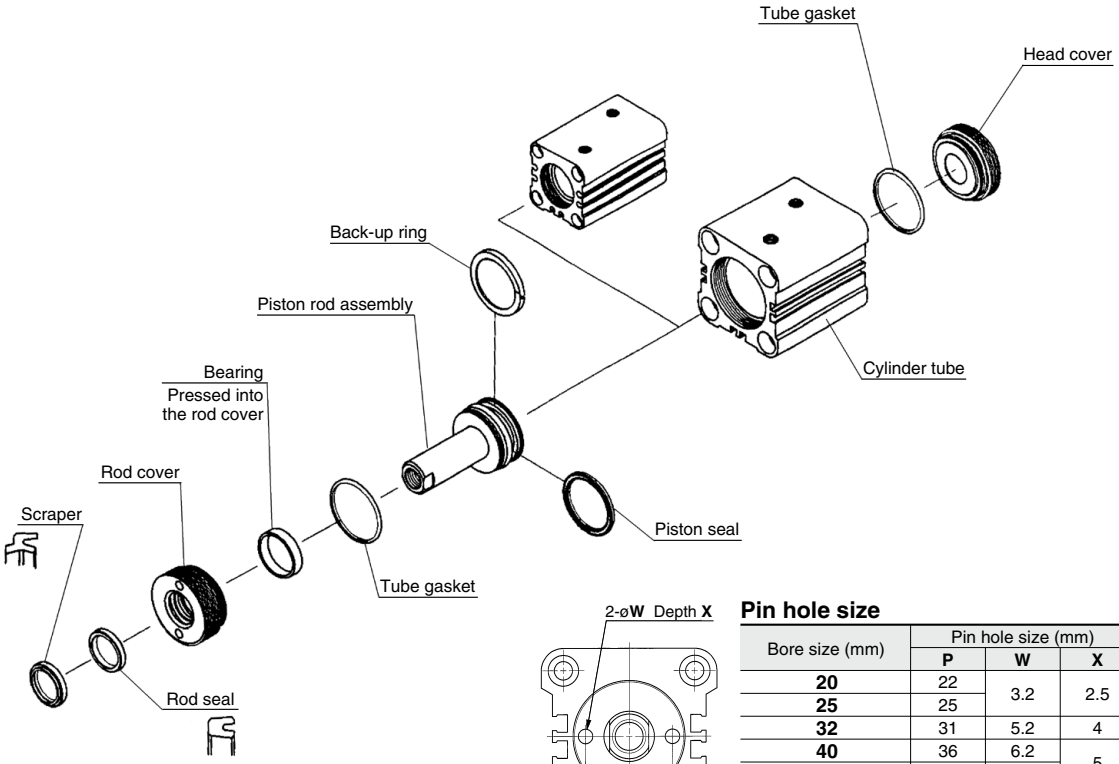

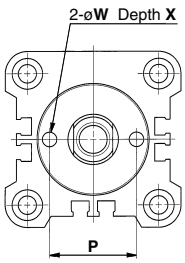

Pin hole size

Bore size (mm)	Pin hole size (mm)		
	P	W	X
20	22	3.2	2.5
25	25		
32	31	5.2	4
40	36	6.2	5
50	46	8	
63	56	9	6
80	70	11	7
100	82	13	8

⚠Caution

1. The piston rod assembly cannot be disassembled. The bearing cannot be removed because it is pressed into the rod cover.
2. Replace the seal with a new one to disassemble and repair the cylinder.
3. If fuel oil such as gasoline and kerosene or solvent are used to wash parts touched to seal, wipe off or dry up them completely before assembling the seal.
4. Apply hydraulic fluid (Oil used for the cylinder) or grease to the seal and the housing to be able to move smoothly before assembling.
5. Assemble the seal after confirming the sealing direction.
6. If a driver is used for mounting, round the point of the driver not to make a flaw on the seal and housing.
7. For handling the seal, take care to avoid excessive extension and deformation.
8. A special tool is required for disassembly. Refer to the “Pin hole size” table.
9. Some cylinders (bore sizes ø80 and ø100) are tightened with a large tightening torque and therefore cannot be disassembled.

Cover tightening torque

Bore size (mm)	Tightening torque (N·m)
20	23.5 ± 2.4
25	35.3 ± 3.5
32	68.6 ± 6.8
40	117.7 ± 11.7
50	215.7 ± 21.6
63	372.6 ± 37.3
80	804.1 ± 80.4
100	1470 ± 147

∗ Remount the cover with the tightening torques listed above.

1. Exploded View

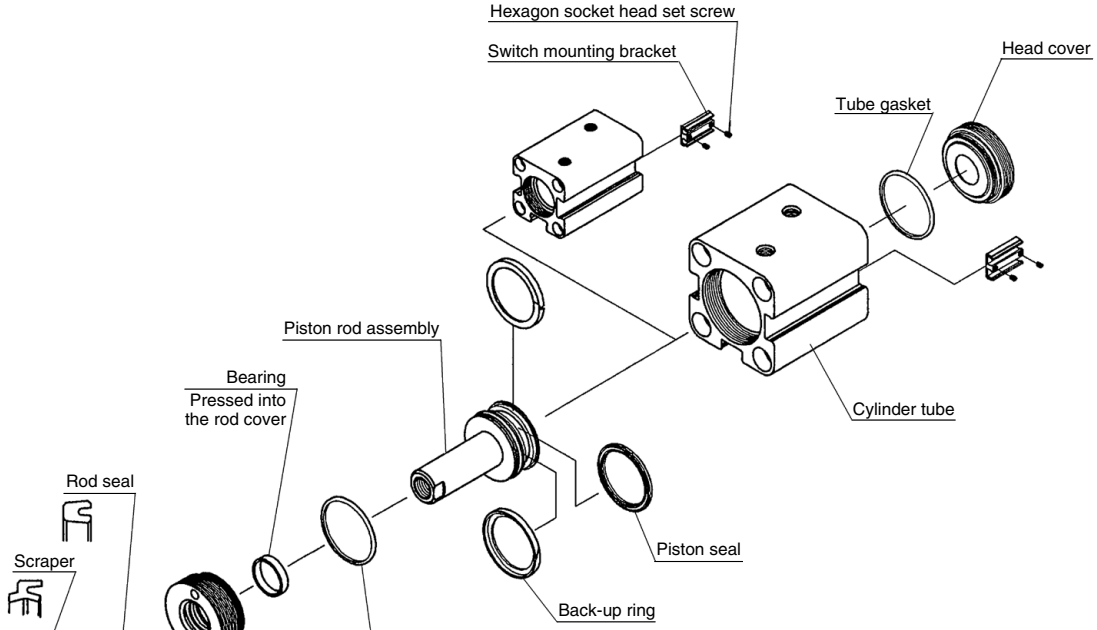

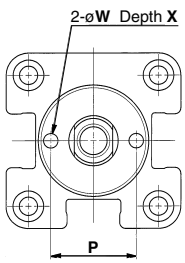

Pin hole size

Bore size (mm)	Pin hole size (mm)		
	P	W	X
20	22	3.2	2.5
25	25		
32	31	5.2	4
40	36	6.2	5
50	46	8	
63	56	9	6
80	70	11	7
100	82	13	8

⚠Caution

1. The piston rod assembly cannot be disassembled. The bearing cannot be removed because it is pressed into the rod cover.
2. Replace the seal with a new one to disassemble and repair the cylinder.
3. If fuel oil such as gasoline and kerosene or solvent are used to wash parts touched to seal, wipe off or dry up them completely before assembling seal.
4. Apply hydraulic fluid (Oil used for the cylinder) or grease to the seal and the housing to be able to move smoothly before assembling.
5. Assemble the seal after confirming the sealing direction.
6. If a driver is used for mounting, round the point of the driver not to make a flaw on the seal and the housing.
7. For handling the seal, take care to avoid excessive extension and deformation.
8. A special tool is required for disassembly. Refer to the “Pin hole size” table.
9. Some cylinders (bore sizes ø80 and ø100) are tightened with a large tightening torque and therefore cannot be disassembled.

Cover tightening torque

Bore size (mm)	Tightening torque (N·m)
20	23.5 ± 2.4
25	35.3 ± 3.5
32	68.6 ± 6.8
40	117.7 ± 11.7
50	215.7 ± 21.6
63	372.6 ± 37.3
80	804.1 ± 80.4
100	1470 ± 147

∗ Remount the cover with the tightening torques listed above.

1. Exploded View

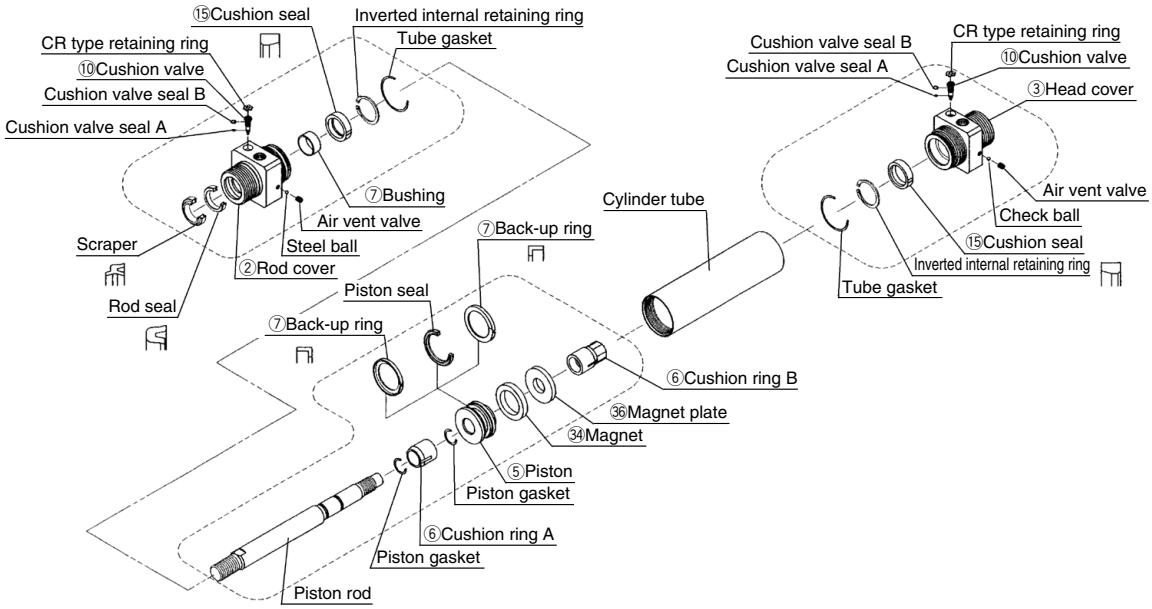

⚠Caution

1. The rod cover and head cover are screw-in type.
2. The piston rod assembly cannot be disassembled. The bushing cannot be taken out as it is pressed into the rod cover.
3. Replace the seal at the time of cylinder disassembly and repair.
4. When fuel oil such as gasoline and kerosene or solvent is used to wash the parts that contact seal, thoroughly wipe or dry them off before placing.
5. Apply hydraulic oil (to be used for the cylinder) or grease to the seal and housing for smooth sliding.
6. Assemble the seal after confirming the sealing direction.
7. Blunt the tip of a driver not to flaw the seal and housing.
8. Carefully handle the seal to avoid excessive elongation and deformation.
9. Please note that the positions of the rod and head covers might move from their original positions upon remounting.

1. Exploded View

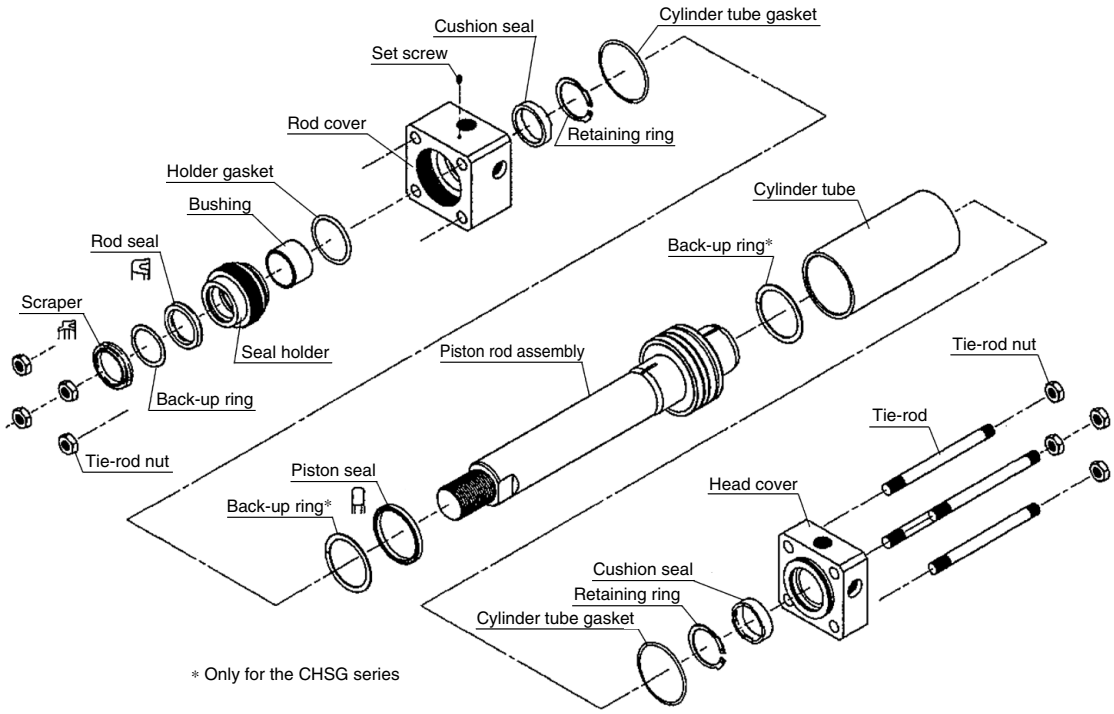

⚠Caution

1. The piston rod assembly cannot be disassembled. The bushing cannot be taken out as it is pressed into the seal holder.
2. Replace the seal at the time of cylinder disassembly and repair.
3. When fuel oil such as gasoline and kerosene or solvent is used to wash the parts that contact seal, thoroughly wipe or dry them off before placing.
4. Apply hydraulic oil (to be used for the cylinder) or grease to the seal and housing for smooth sliding.
5. Verify the sealing direction and then set seal.
6. Blunt the tip of a driver not to flaw the seal and housing when it is used for mounting.
7. Carefully handle the seal to avoid excessive elongation and deformation.

Tie-rod nut tightening torque

Bore size (mm)	Tightening torque (N·m)	
	CHSD	CHSG
32		10.8 ± 1.08
40	10.8 ± 1.08	24.5 ± 2.45
50	24.5 ± 2.45	24.5 ± 2.45
63	24.5 ± 2.45	42.2 ± 4.22
80	53.9 ± 5.39	137.3 ± 13.73
100	107.8 ± 10.78	137.3 ± 13.73

* Tighten the tie-rod nuts diagonally and equally with torque shown in the table above.

1. Disassembling Drawing

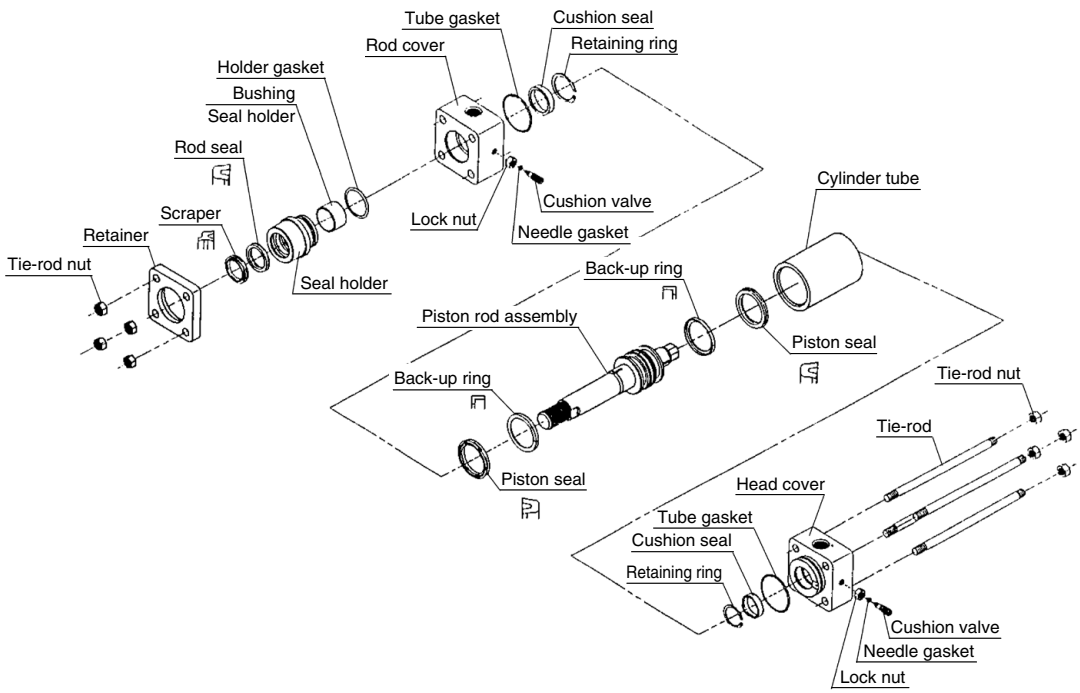

⚠Caution

1. The piston rod assembly cannot be disassembled. The bearing cannot be taken out as it is pressed into the rod cover.
2. Replace the seal at the time of cylinder disassembly and repair.
3. When fuel oil such as gasoline and kerosine or solvent is used to wash the parts that contact seal, thoroughly wipe or dry them off before setting.
4. Apply hydraulic oil (to be used for the cylinder) or grease to the seal and housing for smooth sliding.
5. Verify the sealing direction and then set seal.
6. Blunt the tip of a driver not to flaw the seal and housing when it is used for mounting.
7. Carefully handle the seal to avoid excessive elongation and deformation.

Tie-rod nut tightening torque

Bore size (mm)	Tightening torque (N·m)		
	CH2E	CH2F	CH2G/H
32	11.8 ± 1.1	14.7 ± 1.4	24.5 ± 2.4
40	11.8 ± 1.1	19.6 ± 1.9	24.5 ± 2.4
50	14.7 ± 1.4	24.5 ± 2.4	24.5 ± 2.4
63	24.5 ± 2.4	39.2 ± 3.9	42.1 ± 4.2
80	44.1 ± 4.4	68.6 ± 6.8	107.8 ± 10.7
100	94 ± 9.4	73.5 ± 7.3	147.1 ± 14.7

∗ Tighten the tie-rod nuts diagonally and equally with torque shown in the table above.