Type 1 **Output type for solenoid valves**

Fieldbus System (For Output)

EX120/121/122 Series

Compatible Protocols

DeviceNet™ CC-Link **CompoBus/S**

NKE Corp.: Fieldbus H System CompoNet™

Made to Order **S-Link V**

CE

* Some protocols are not CE-compliant. Refer to How to Order.

★Small unit compatible with a maximum of 16 outputs

★Compatible with a variety of communication networks

Manifold Solenoid Valves

***EX120* Series**

SV1000/2000/3000/4000

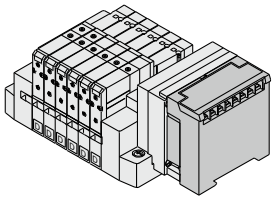

VQ1000/2000

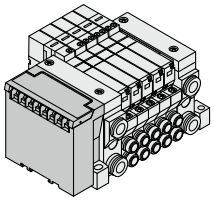

SY3000/5000/7000

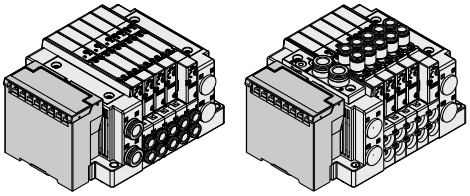

***EX121* Series**

SY3000/5000

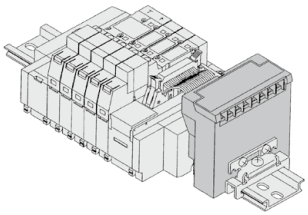

***EX122* Series**

SY3000/5000

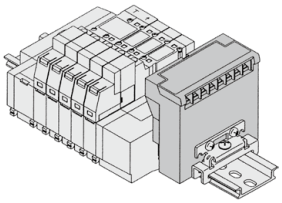

CONTENTS

Type 1 **Output type for solenoid valves**

Fieldbus System (For Output)

EX120/121/122 Series

How to Order SI Unit ····· p. 173
Specifications ····· p. 174
Dimensions/Parts Description ····· p. 175
LED Indicator ····· p. 178

Accessories
❶ Communication Connector ····· p. 179
❷ Power Supply Connector ····· p. 179

Made to Order
① DeviceNet™ PNP (Negative common) output, Occupied points: 16 inputs/16 outputs ····· p. 179
② DeviceNet™ PNP (Negative common) output, Occupied points: 0 inputs/16 outputs ····· p. 179
③ S-LINK V compatible NPN (Positive common) 16 outputs ····· p. 179

Specific Product Precautions ····· p. 179

Fieldbus System For Output

EX120/121/122 Series

∗ Some protocols are not CE-compliant.

How to Order SI Unit

EX12 0 – S DN1 – □

Valve interface

0	Plug-in
1	Flat ribbon cable DIN rail mounting
2	Plug-in DIN rail mounting

Made to Order (Refer to page 179.)

Protocol	Output polarity	Occupied points
DeviceNet™	PNP (Negative common)	16 inputs/ 16 outputs
DeviceNet™	PNP (Negative common)	0 inputs/ 16 outputs
S-LINK V	NPN (Positive common)	0 inputs/ 16 outputs

Protocol

		CE-compliant
DN1	DeviceNet™∗1	●
DN1-X26∗2	DeviceNet™∗1	●
MJ1	CC-Link	●
CS1	OMRON Corp.: CompoBus/S (16 outputs)	●
CS2	OMRON Corp.: CompoBus/S (8 outputs)	●
UH1	NKE Corp.: Fieldbus H System	—
CM1	CompoNet™ NPN (Positive common)	●
CM3	CompoNet™ PNP (Negative common)	●

∗1 DN1's occupied points are 16 inputs and 16 outputs, while DN1-X26 has 0 inputs and 16 outputs.

∗2 A manifold part number is not specified for this model. Please contact SMC for the manifold integrated type.

Specifications

Common Specifications

Communication	**Terminating resistor**	Not provided
Internal current consumption (Unit)		100 mA or less
Environment	**Enclosure**	IP20
	Operating temperature range	0 to 55°C (Valve 8 points ON) 0 to 50°C (Valve 16 points ON)
	Operating humidity range	35 to 85%RH (No condensation)
	Withstand voltage	1500 VAC for 1 minute between whole external terminal and enclosure
	Insulation resistance	2 MΩ or more (500 VDC) between whole external terminal and enclosure

Model		**EX12□-SDN1**	**EX12□-SDN1-X26**	**EX12□-SMJ1**	**EX12□-SCS1** **EX12□-SCS2**
Communication	**Protocol**	DeviceNet™		CC-Link	OMRON Corp.: CompoBus/S
	Version∗1	Release 2.0		Ver. 1.10	—
	Communication speed	125 k/250 k/500 kbps		156 k/625 kbps 2.5 M/5 M/10 Mbps	750 kbps
	Configuration file∗2	EDS file		CSP+ file	—
	I/O occupation area (Inputs/Outputs)	16/16	0/16	32/32 (1 station, remote I/O stations)	SCS1: 0/16 SCS2: 0/8
Power supply voltage	**For control**	11 to 25 VDC		15 to 30 VDC	14 to 26.4 VDC
	For valve	24 VDC +10%/–5%			
Output	**Output type**	Sink/NPN (Positive common)			
	Number of outputs	16 points			SCS1: 16 points SCS2: 8 points
	Load	Solenoid valve with surge voltage suppressor 24 VDC, 2.1 W or less (SMC)			
	Fail safe	CLEAR	HOLD/CLEAR (Switch setting)	CLEAR	HOLD/CLEAR (Switch setting)
Standards		CE marking			
Weight		EX120: 110 g or less, EX121: 140 g or less, EX122: 130 g or less			
Accessory		Communication connector 1 pc., Power supply connector 1 pc.		—	

∗1 Please note that the version is subject to change.
∗2 The setting file can be downloaded from the SMC website, http://www.smcworld.com

Model		**EX12□-SUH1**	**EX12□-SCM1**	**EX12□-SCM3**
Communication	**Protocol**	NKE Corp.: Fieldbus H System	CompoNet™	
	Communication speed	29.4 kbps	93.75 kbps/1.5 M/3 M/4 Mbps	
	Configuration file	—	EDS file∗1	
	I/O occupation area (Inputs/Outputs)	0/16		
Power supply voltage	**For control**	24 VDC ±10% (Common power supply)	14 to 26.4 VDC	
	For valve		24 VDC +10%/–5%	
Output	**Output type**	Sink/NPN (Positive common)	Sink/NPN (Positive common)	Source/PNP (Negative common)
	Number of outputs	16 points		
	Load	Solenoid valve with surge voltage suppressor 24 VDC, 2.1 W or less (SMC)		
	Fail safe	CLEAR	HOLD/CLEAR (Setting via network)	
Standards		—	CE marking	
Weight		EX120: 110 g or less EX121: 140 g or less EX122: 130 g or less	EX120: 100 g or less EX121: 120 g or less EX122: 110 g or less (including accessory)	
Accessory		—	Power supply connector (EX9-CP2) 1 pc.∗2	

∗1 The setting file can be downloaded from the SMC website, http://www.smcworld.com
∗2 Communication connector (for the opposite side) is not provided.

Dimensions/Parts Description

EX120

EX120-SDN1(-X26)

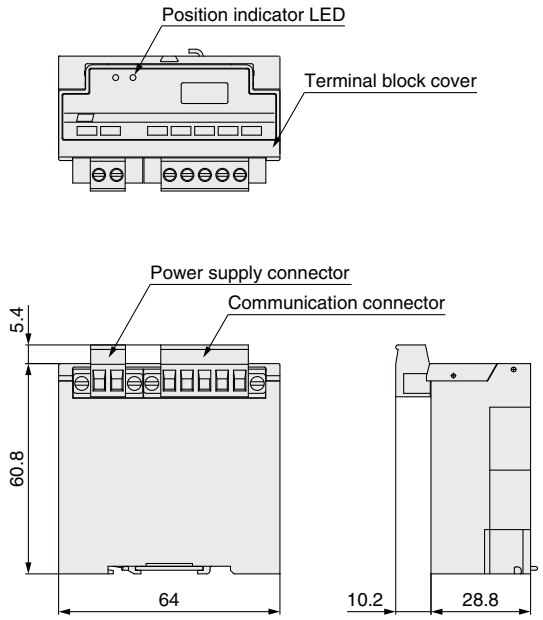

EX120-SMJ1, SCS□, SUH1

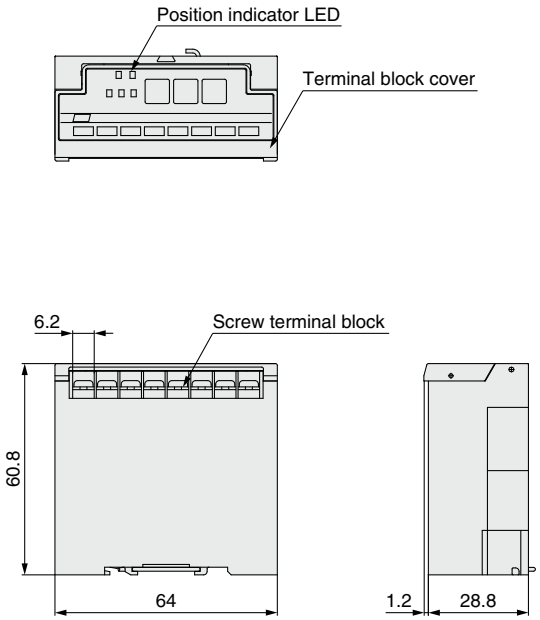

EX120-SCM□

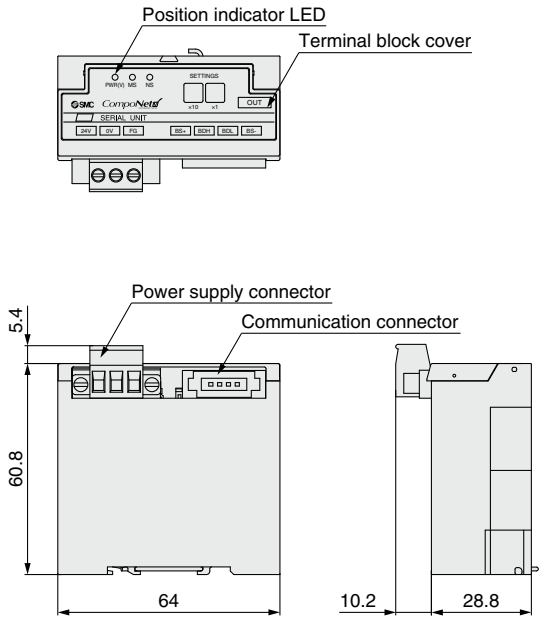

Dimensions/Parts Description

EX121

EX121-SDN1(-X26)

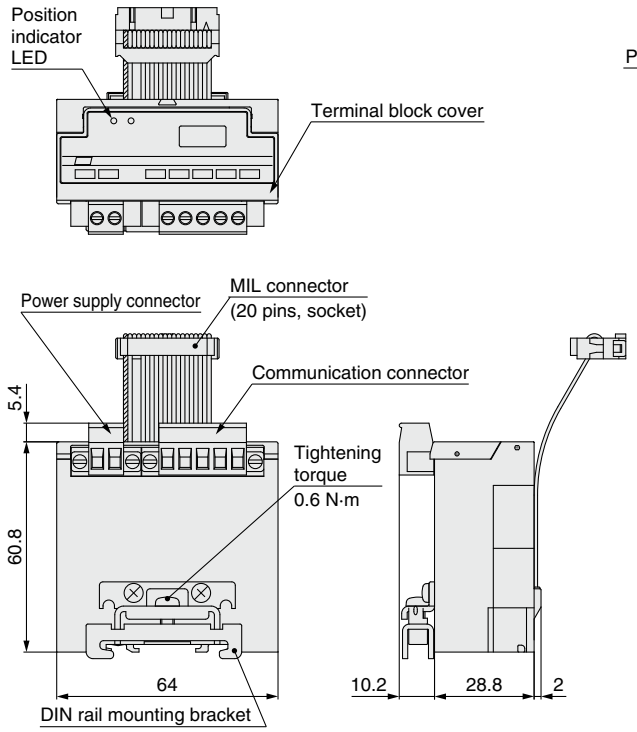

EX121-SMJ1, SCS□, SUH1

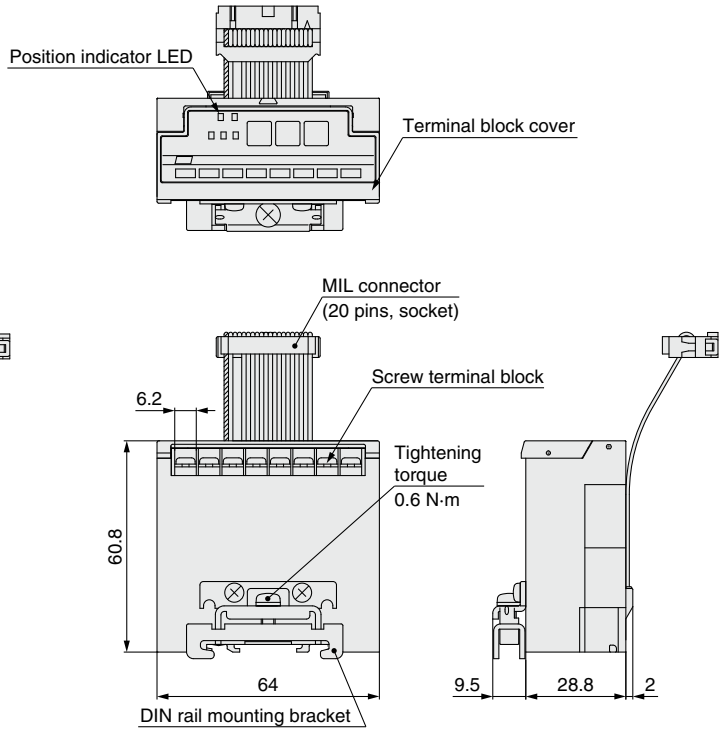

EX121-SCM□

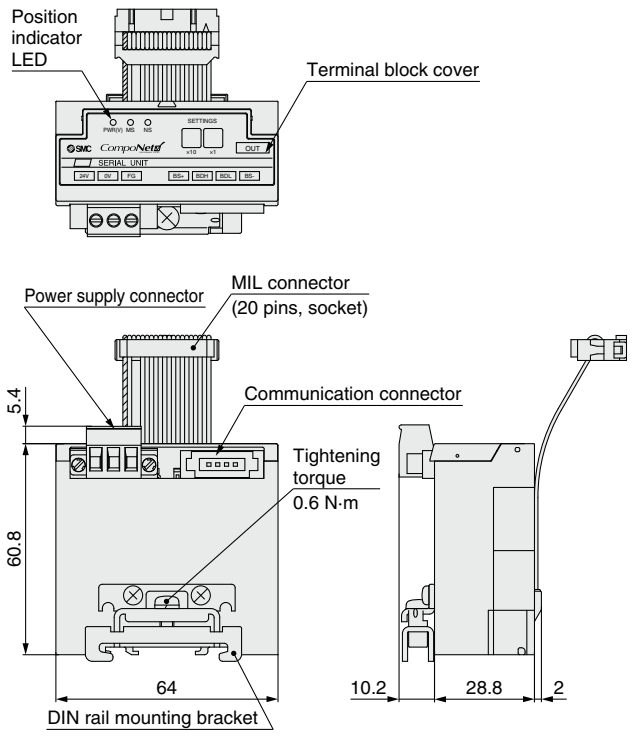

Dimensions/Parts Description

EX122

EX122-SDN1(-X26)

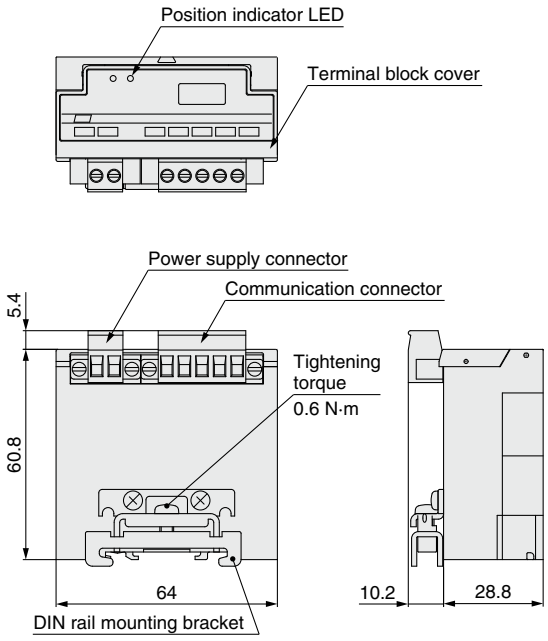

EX122-SMJ1, SCS□, SUH1

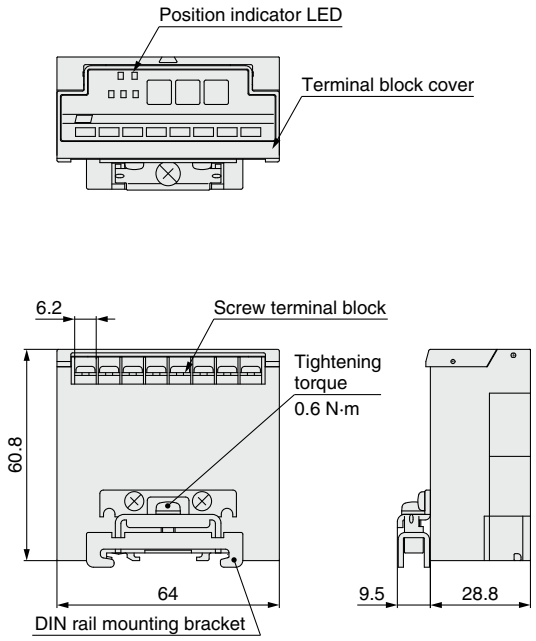

EX122-SCM□

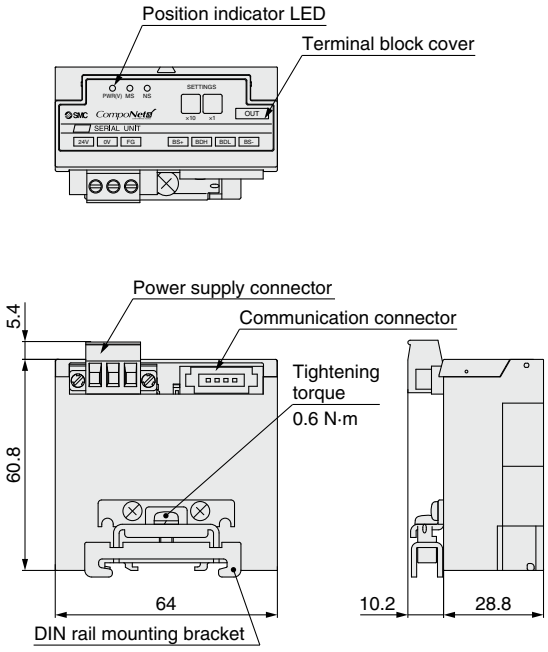

LED Indicator

EX12□-SDN1

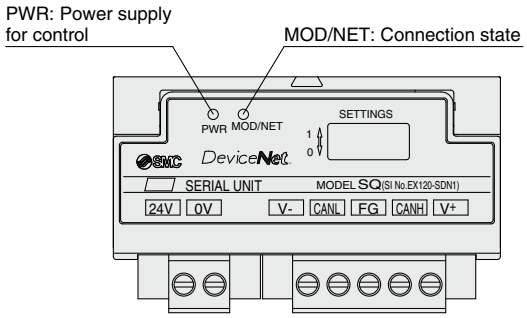

EX12□-SMJ1

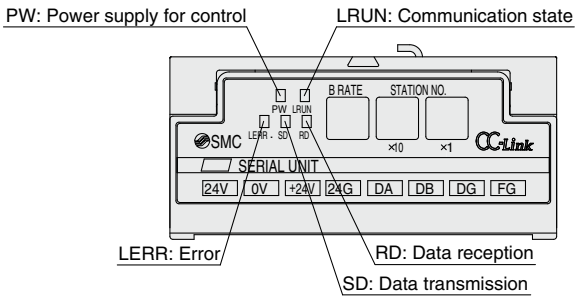

EX12□-SCS□

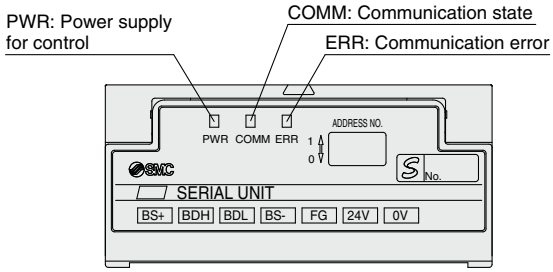

EX12□-SUH1

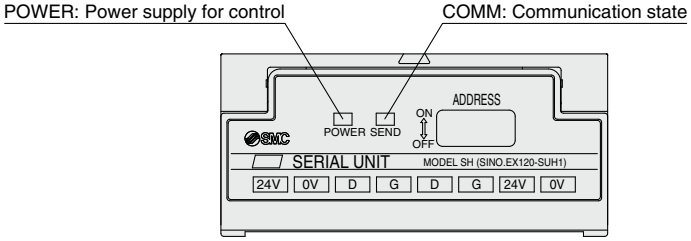

EX12□-SCM□

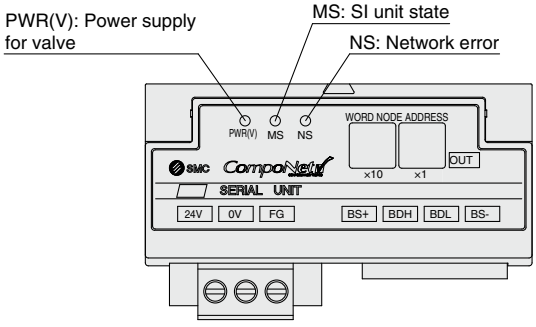

Accessories (For EX12□-SCM□)

❶ Communication Connector

Press-in connector for flat cables
Use this connector for the standard dedicated flat cable.
The communication connector does not come with this product.

EX9-CCM1

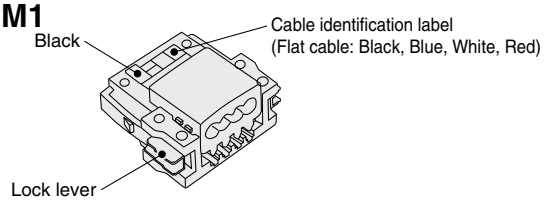

Terminal block connector for round cables (VCTF)
Use this connector for the VCTF cable.
The communication connector does not come with this product.

EX9-CCM2

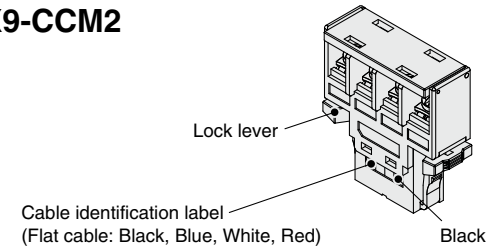

❷ Power Supply Connector

Straight type power supply connector
This connector is supplied at the time of shipment.

EX9-CP2

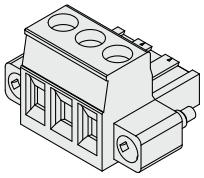

T-branch type power supply connector
This connector is not supplied at the time of shipment.

EX9-CP3

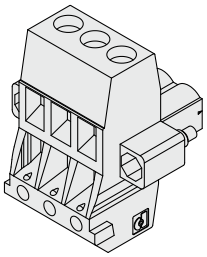

Made to Order

Please contact SMC for detailed specifications and lead times.
Prepare the SI unit and manifold valve (without SI unit) separately, and combine them before use.

① DeviceNet™ PNP (Negative common) output, Occupied points: 16 inputs/16 outputs

EX12 [0] -SDN1-X2

●**Valve interface**

0	Plug-in
1	Flat ribbon cable DIN rail mounting
2	Plug-in DIN rail mounting

● Dimensions are the same as those of the standard type.

② DeviceNet™ PNP (Negative common) output, Occupied points: 0 inputs/16 outputs

EX12 [0] -SDN1-X77

●**Valve interface**

0	Plug-in
1	Flat ribbon cable DIN rail mounting
2	Plug-in DIN rail mounting

● Dimensions are the same as those of the standard type.

③ S-LINK V compatible NPN (Positive common) 16 outputs

EX120-SSL1-X99

● Dimensions are the same as those of the CC-Link (EX120-SMJ1).

⚠ Specific Product Precautions

Be sure to read this before handling the products. Refer to page 277 for safety instructions. For fieldbus system precautions, refer to pages 278 to 280 and the "Operation Manual" on the SMC website: http://www.smcworld.com

Operating Environment

⚠ Warning

1. Do not use this product in the presence of dust, particles, water, chemicals, and oil. Use around such materials is likely to cause a malfunction or breakage.

■ **Trademark**
DeviceNet™ is a trademark of ODVA.
CompoNet™ is a trademark of ODVA.

Type 1 Output type for solenoid valves

Fieldbus System (For Output)

EX123/124/126 Series

Compatible Protocols

DeviceNet™ CC-Link **CompoBus/S** **NKE Corp.: Fieldbus H System**

Made to Order CompoNet™

CE

* Only the EX124 and EX126 series are CE-compliant.

★Enclosure IP65 (EX123, EX124), IP67 (EX126)

★Maximum 16 outputs

Manifold Solenoid Valves

***EX123* Series**

VQ2000/4000/5000

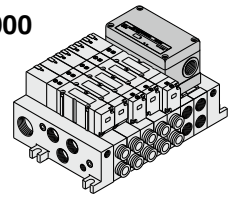

***EX124* Series**

VQ2000/4000/5000

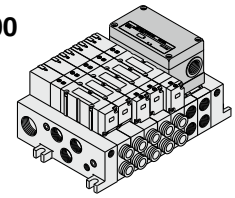

***EX126* Series**

SY3000/5000/7000

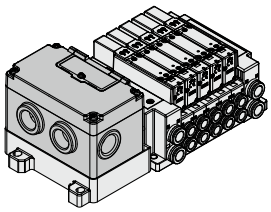

SV1000/2000/3000

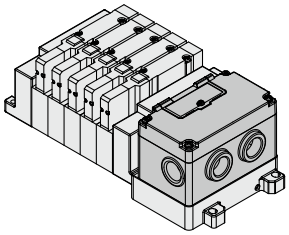

VQC1000/2000/4000/5000

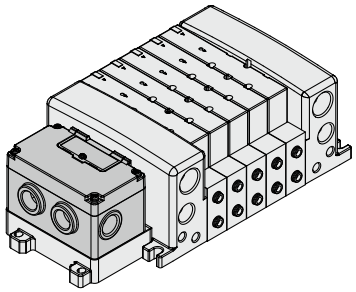

CONTENTS

Type 1 Output type for solenoid valves

Fieldbus System (For Output)

EX123/124/126 Series

How to Order SI Unit ..... p. 49
Specifications ..... p. 50
Dimensions/Parts Description ..... p. 51
LED Indicator ..... p. 52

Accessories
❶ Replacement Fuse ..... p. 52
❷ Drip Proof Plug Assembly ..... p. 52

Made to Order
① DeviceNet™ PNP (Negative common), Occupied points: 16 inputs/16 outputs ..... p. 53
② DeviceNet™ PNP (Negative common), Occupied points: 0 inputs/16 outputs ..... p. 53
③ CompoNet™ ..... p. 53
④ Signal Cut Block ..... p. 53

Specific Product Precautions ..... p. 53

Fieldbus System
For Output
EX123/124/126 Series

∗ Only the EX124 and EX126 series are CE-compliant.

How to Order SI Unit

EX12 3 U – S UH1

Unit specifications

3	Common power supply of control and valve Enclosure IP65 Compatible with the VQ valves

Mounting specifications

U	Mount a unit to the U side of the manifold
D	Mount a unit to the D side of the manifold

Protocol

		CE-compliant
UH1	NKE Corp.: Fieldbus H System	—

EX12 4 U – S DN1 – □

Unit specifications

4	Separate power supply of control and valve Enclosure IP65 Compatible with the VQ valves

Mounting specifications

U	Mount a unit to the U side of the manifold
D	Mount a unit to the D side of the manifold

Made to Order (Refer to page 53.)

Protocol	Output polarity	Occupied points
DeviceNet™	PNP (Negative common)	16 inputs/ 16 outputs
DeviceNet™	PNP (Negative common)	0 inputs/ 16 outputs

Protocol

		CE-compliant
DN1	DeviceNet™∗1	●
DN1-X26	DeviceNet™∗1	●
MJ1	CC-Link	●
CS1	OMRON Corp.: CompoBus/S (16 outputs)	●
CS2	OMRON Corp.: CompoBus/S (8 outputs)	●

∗1 DN1's occupied points are 16 inputs and 16 outputs, while DN1-X26 has 0 inputs and 16 outputs.

EX12 6 D – S MJ1

Unit specifications

6	Separate power supply of control and valve Enclosure IP65 Compatible with the SY/SV/VQC valves

Mounting specifications

D	Mount a unit to the D side of the manifold

Protocol

		CE-compliant
MJ1	CC-Link	●

Specifications

Common Specifications

Communication	**Terminating resistor**	Not provided
Internal current consumption (Unit)		100 mA or less
Output	**Output type**	Sink/NPN (Positive common)
	Load	Solenoid valve with surge voltage suppressor 24 VDC, 2.1 W or less (SMC)
Environmental resistance	**Operating temperature range**	0 to 55°C (Valve 8 points ON) 0 to 50°C (Valve 16 points ON)
	Operating humidity range	35 to 85%RH (No condensation)
	Withstand voltage	1500 VAC for 1 minute between whole external terminal and enclosure
	Insulation resistance	2 MΩ or more (500 VDC) between whole external terminal and enclosure
Weight		240 g or less
Accessory		4 unit mounting screws (M4 x 10)

Model			**EX123□-SUH1**	**EX124□-SDN1**	**EX124□-SDN1-X26**∗3
Communication	**Applicable system**	**Protocol**	NKE Corp.: Fieldbus H System	DeviceNet™	DeviceNet™
		Version∗1	—	Release 2.0	
	Communication speed		29.4 kbps	125 k/250 k/500 kbps	
	Configuration file∗2			EDS file	
	I/O occupation area (Inputs/Outputs)		0/16	16/16	0/16
Power supply voltage	**For control**		24 VDC ±10% (Common power supply)	11 to 25 VDC	
	For valve			24 VDC +10%/−5%	
Output	**Number of outputs**		16 points		
	Fail safe		CLEAR		HOLD/CLEAR (Switch setting)
Environment	**Enclosure**		IP65		
Standards			—	CE marking	

Model			**EX124□-SMJ1**	**EX124□-SCS1** **EX124□-SCS2**	**EX126D-SMJ1**
Communication	**Applicable system**	**Protocol**	CC-Link	OMRON Corp.: CompoBus/S	CC-Link
		Version∗1	Ver. 1.10	—	Ver. 1.10
	Communication speed		156 k/625 kbps 2.5 M/5 M/10 Mbps	750 kbps	156 k/625 kbps 2.5 M/5 M/10 Mbps
	Configuration file∗2		CSP+ file	—	CSP+ file
	I/O occupation area (Inputs/Outputs)		32/32 (1 station, remote I/O stations)	SCS1: 0/16 SCS2: 0/8	32/32 (1 station, remote I/O stations)
Power supply voltage	**For control**		15 to 30 VDC	14 to 26.4 VDC	15 to 30 VDC
	For valve		24 VDC +10%/−5%		
Output	**Number of outputs**		16 points	SCS1: 16 points SCS2: 8 points	16 points
	Fail safe		CLEAR	HOLD/CLEAR (Switch setting)	CLEAR
Environment	**Enclosure**		IP65		IP67
Standards			CE marking		

∗1 Please note that the version is subject to change.
∗2 The setting file can be downloaded from the SMC website, http://www.smcworld.com
∗3 Since this is a special product, a manifold part number is not specified. Please consult SMC for the manifold integrated type.
∗ For detailed specifications other than the above, refer to the operation manual that can be downloaded from SMC website, http://www.smcworld.com

Dimensions/Parts Description

EX123□-S□□□, EX124□-S□□□

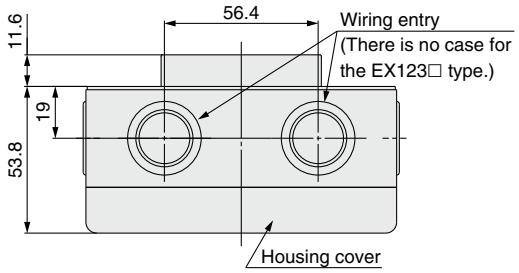

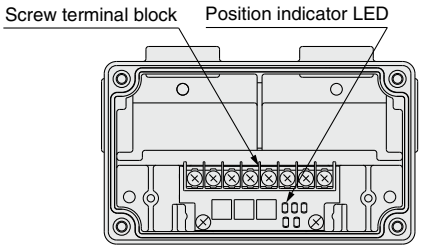

Housing cover diagram

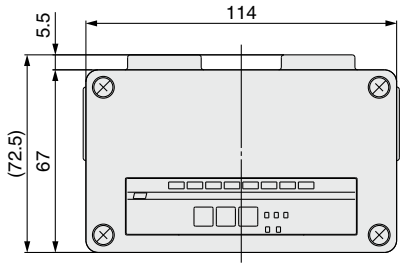

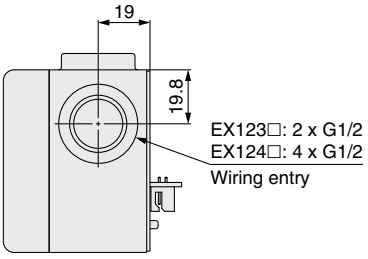

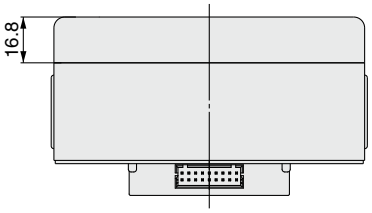

∗ The housing cover of the EX124U/D-SMJ1 is the same as that of the EX126D-SMJ1.

EX126D-SMJ1

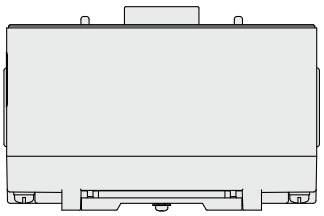

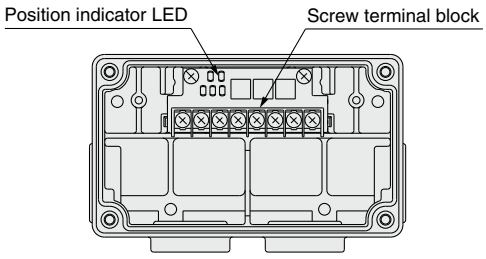

Housing cover diagram

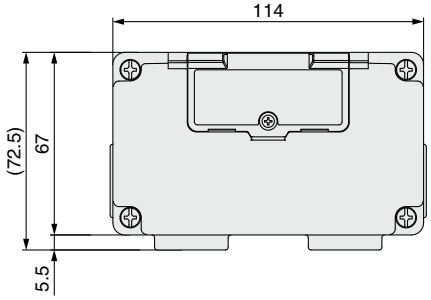

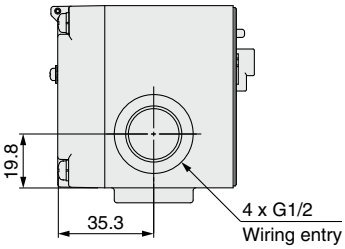

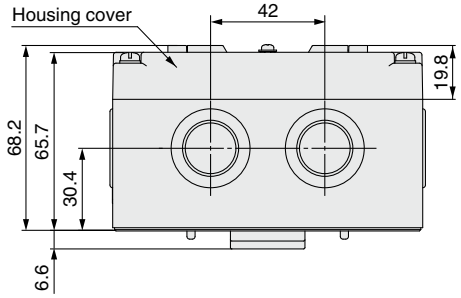

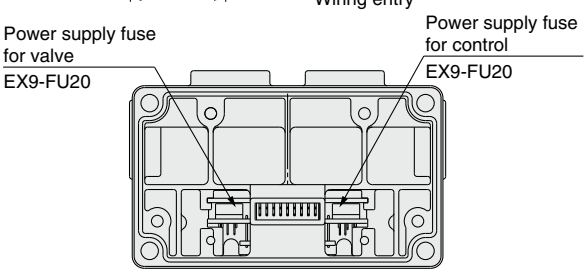

Housing bottom diagram

LED Indicator

EX123□-SUH1

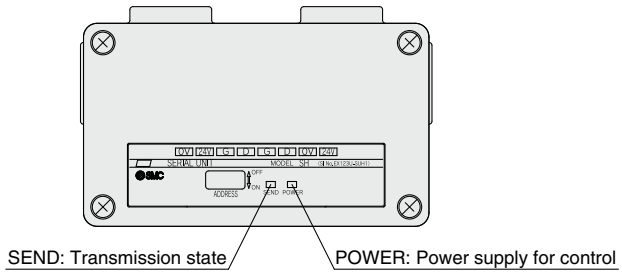

EX124□-SDN1

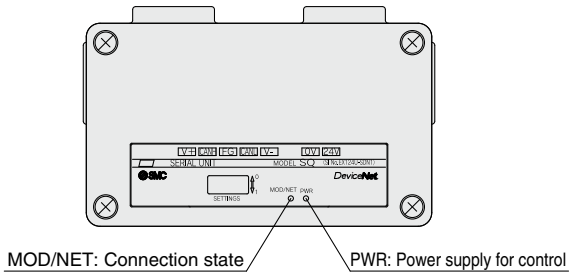

EX124□-SMJ1

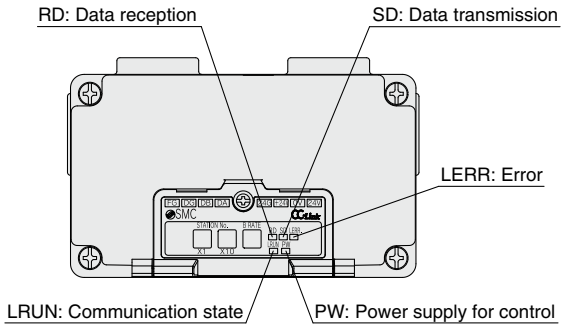

EX124□-SCS□

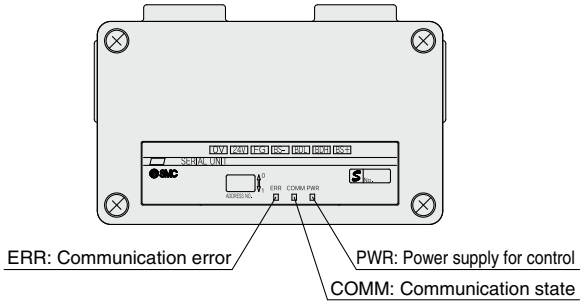

EX126D-SMJ1

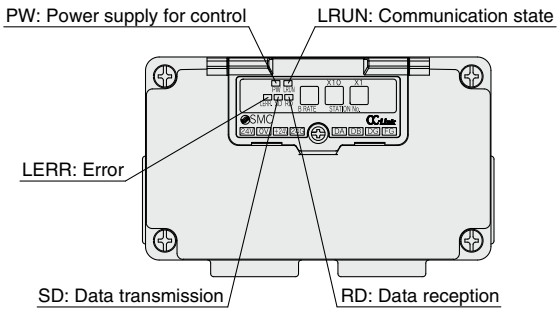

Accessories

❶ Replacement Fuse

A replacement fuse for the EX126D-SMJ1

EX9-FU20

Applicable model	EX126D-SMJ1
Rated current	2.0 A

Fuse

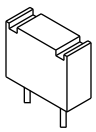

❷ Drip Proof Plug Assembly

Use when the wiring entry (G1/2) is not being used.
Incorrect handling of the wiring entry may allow foreign matter to enter the SI unit, which will lead to a malfunction and damage to the SI unit.

AXT100-B04A

Made to Order

Please contact SMC for detailed specifications and lead times.
Prepare the SI unit, signal cut block, and manifold valve (without SI unit) separately, and combine them before use.

Made to Order

① DeviceNet™ PNP (Negative common), Occupied points: 16 inputs*1 /16 outputs

EX124 U -SDN1-X2

Mounting specifications

U	Mount a unit to the U side of the manifold
D	Mount a unit to the D side of the manifold

- Dimensions are the same as those of the standard type.

*1 The SI unit cannot be connected to an input device but occupies memory areas of 16 input points (2 bytes) as a mirror function of output data.
The mirror function is used to transmit output data received by the SI unit as input data exactly as it is.

② DeviceNet™ PNP (Negative common), Occupied points: 0 inputs/16 outputs

EX124 U -SDN1-X77

Mounting specifications

U	Mount a unit to the U side of the manifold
D	Mount a unit to the D side of the manifold

- Dimensions are the same as those of the standard type.

③ CompoNet™

- Please contact SMC for details.

④ Signal cut block

EX9-SC1-8

- A switch unit that forcibly turns OFF the output signal to the valve by means of a toggle switch operation in double 1-station units
- Open the switch guard to prevent misoperation, and then carry out the operation.
- It comes with a safety mechanism which returns the switch to the normal position (AUTO) after the switch guard is closed.
- Enclosure: IP67

Example of connections

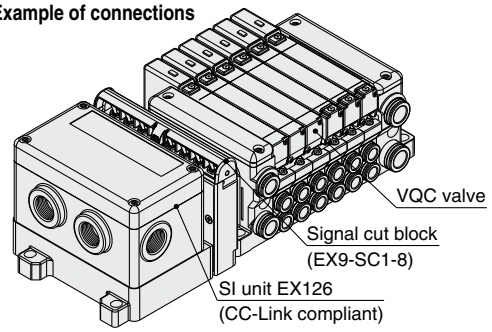

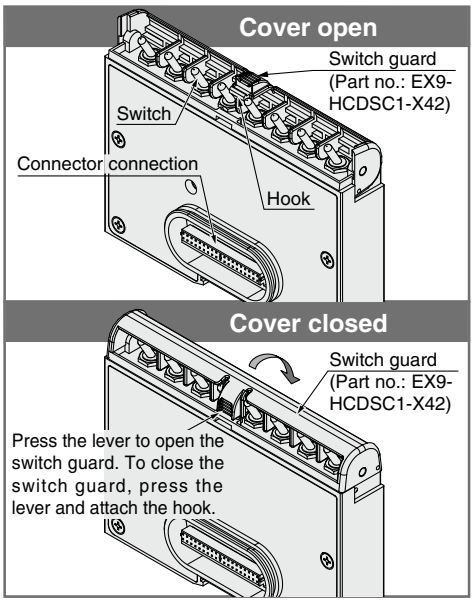

⚠ Specific Product Precautions

Be sure to read this before handling the products. Refer to page 277 for safety instructions. For fieldbus system precautions, refer to pages 278 to 280 and the "Operation Manual" on the SMC website: http://www.smcworld.com

Operating Environment

⚠ Caution

1. Select the proper type of enclosure according to the operating environment.
IP65/67 is achieved when the following conditions are met.
1) Provide appropriate wiring between all units using electrical wiring cables and communication connectors cables.
2) For wiring, use a G1/2 cable gland.
3) Appropriately mount each unit and valve manifold.
4) Be sure to install a drip proof plug assembly (AXT100-B04A) on each unused connector. This is to prevent the risk of the SI unit malfunctioning or breaking down.
If using in an environment that is exposed to water splashes, please take measures such as using a cover.

■ **Trademark**
DeviceNet™ is a trademark of ODVA.
CompoNet™ is a trademark of ODVA.

Type 1 Output type for solenoid valves

Fieldbus System (For Output)

EX140 Series

Compatible Protocols

DeviceNet™ CC-Link **CompoBus/S**

NKE Corp.: Fieldbus H System

CE

* Some protocols are not CE-compliant. Refer to How to Order.

★Thinner unit with low height
★Maximum 16 outputs

Manifold Solenoid Valves

SZ3000

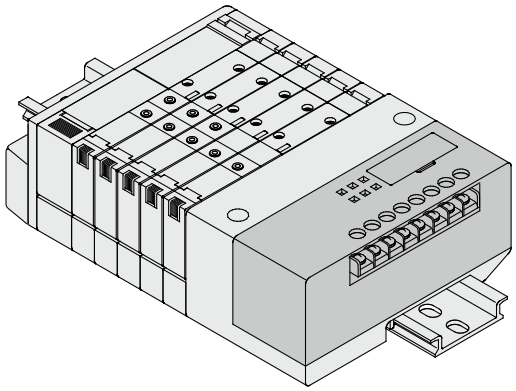

SQ1000/2000

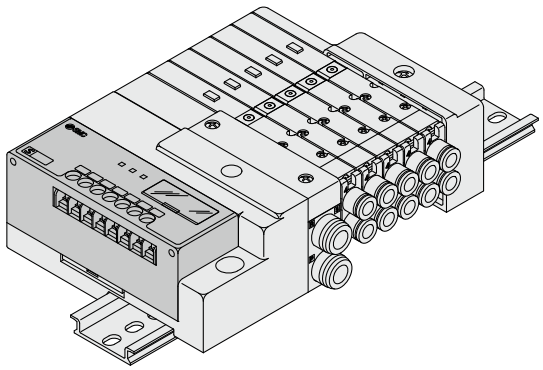

CONTENTS

Type 1 Output type for solenoid valves

Fieldbus System (For Output)
EX140 Series

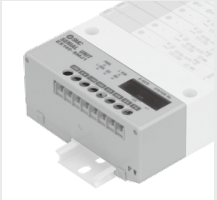

How to Order SI Unit ····· p. 181
Specifications ····· p. 181
Dimensions/Parts Description ····· p. 182
LED Indicator ····· p. 183

Specific Product Precautions ····· p. 183

Fieldbus System For Output
EX140 Series

CE

∗ Some protocols are not CE-compliant.

How to Order SI Unit

EX140-S DN1

Protocol

		CE-compliant
DN1	DeviceNet™	●
MJ1	CC-Link	●
CS1	OMRON Corp.: CompoBus/S (16 outputs)	●
CS2	OMRON Corp.: CompoBus/S (8 outputs)	●
UH1	NKE Corp.: Fieldbus H System	—

Specifications

Model			EX140-SDN1	EX140-SMJ1	EX140-SCS1 EX140-SCS2	EX140-SUH1
Communication	Applicable system	Protocol	DeviceNet™	CC-Link	OMRON Corp.: CompoBus/S	NKE Corp.: Fieldbus H System
		Version∗1	Release 2.0	Ver. 1.10	—	
	Communication speed		125 k/250 k/500 kbps	156 k/625 kbps 2.5 M/5 M/10 Mbps	750 kbps	29.4 kbps
	Configuration file∗2		EDS file	CSP+ file	—	
	I/O occupation area (Inputs/Outputs)		0/16	32/32 (1 station, remote I/O stations)	SCS1: 0/16 SCS2: 0/8	0/16
	Terminating resistor		Not provided			
Power supply voltage	For control		11 to 25 VDC	15 to 30 VDC	14 to 26.4 VDC	24 VDC ±10% (Common power supply)
	For valve		24 VDC +10%/–5%			
Internal current consumption (Unit)			100 mA or less			
Output	Output type		Sink/NPN (Positive common)			
	Number of outputs		16 outputs		SCS1: 16 outputs SCS2: 8 outputs	16 outputs
	Load		Solenoid valve with surge voltage suppressor 24 VDC, 2.1 W or less (SMC)			
	Fail safe		HOLD/CLEAR (Switch setting)			CLEAR
Environmental resistance	Enclosure		IP20			
	Operating temperature range		0 to 55°C (Valve 8 points ON) 0 to 50°C (Valve 16 points ON)			
	Operating humidity range		35 to 85%RH (No condensation)			
	Withstand voltage		1500 VAC for 1 minute between whole external terminal and enclosure			
	Insulation resistance		2 MΩ or more (500 VDC) between whole external terminal and enclosure			
Standards			CE marking			—
Weight			80 g or less			
Accessory			Communication connector 1 pc., Power supply connector 1 pc.	—		

∗1 Please note that the version is subject to change.
∗2 The setting file can be downloaded from SMC website, http://www.smcworld.com
∗ For detailed specifications other than the above, refer to the operation manual that can be downloaded from SMC website, http://www.smcworld.com

Dimensions/Parts Description

EX140-SDN1

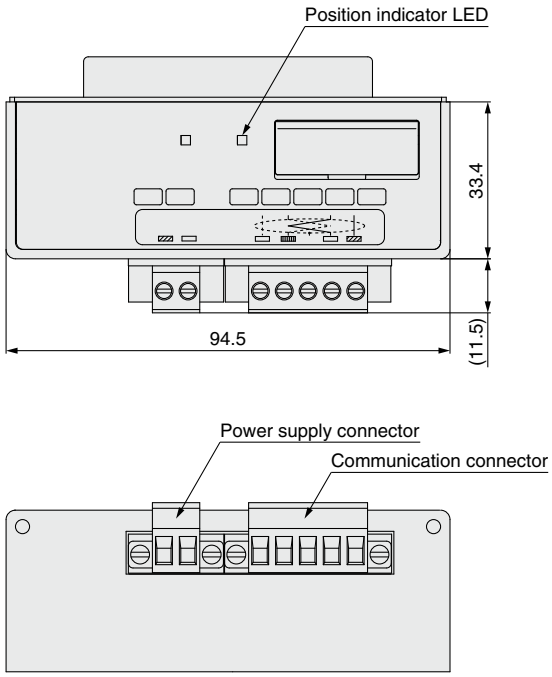

EX140-SMJ1, SCS□, SUH1

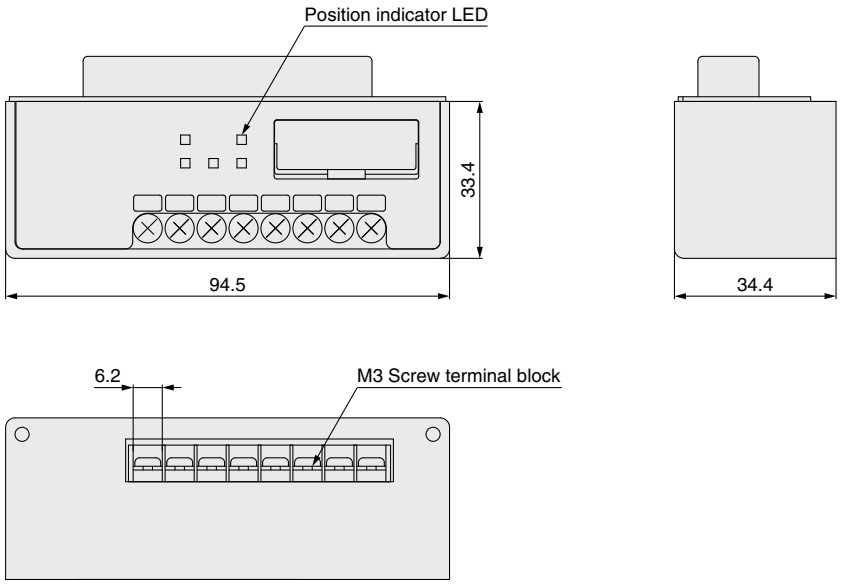

LED Indicator

EX140-SDN1

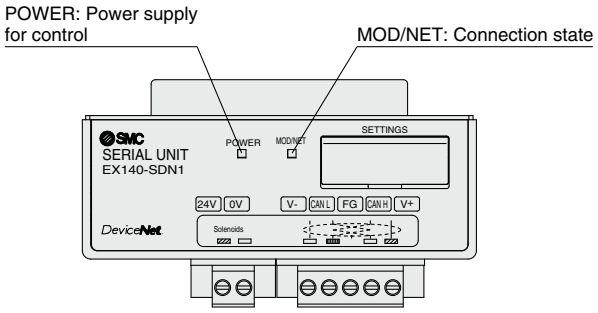

EX140-SMJ1

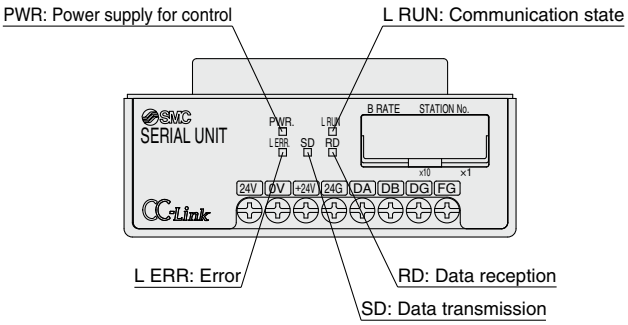

EX140-SCS□

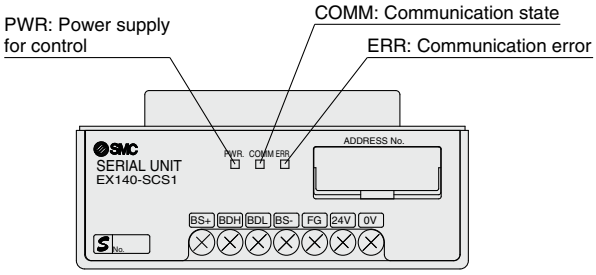

EX140-SUH1

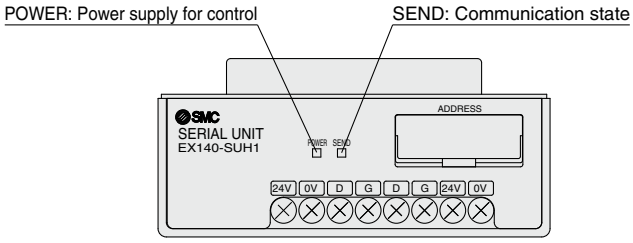

⚠ Specific Product Precautions

Be sure to read this before handling the products. Refer to page 277 for safety instructions. For fieldbus system precautions, refer to pages 278 to 280 and the "Operation Manual" on the SMC website: http://www.smcworld.com

Operating Environment

⚠Warning

1. Do not use this product in the presence of dust, particles, water, chemicals, and oil. Use around such materials is likely to cause a malfunction or breakage.

■ Trademark
DeviceNet™ is a trademark of ODVA.

Type 1 Output type for solenoid valves

Fieldbus System (For Output)

EX180 Series

Compatible Protocols

DeviceNet™ CC-Link

Made to Order EtherCAT® AnyWireASLINK

CE c UL us RoHS

* Excludes the S0700.

★Thinner unit with low height
★Maximum 32 outputs

Manifold Solenoid Valves

SY3000/5000/7000

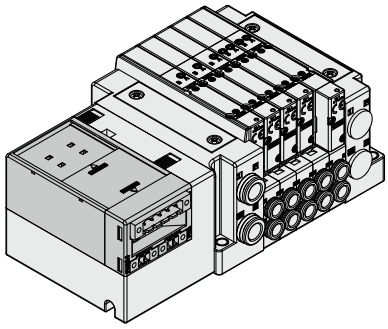

SJ2000/3000

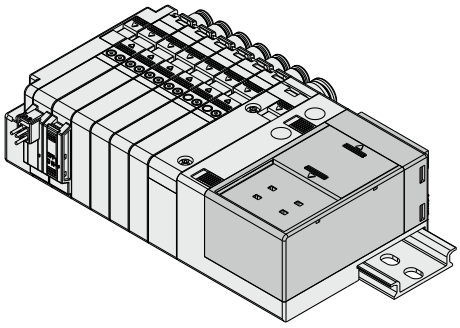

S0700

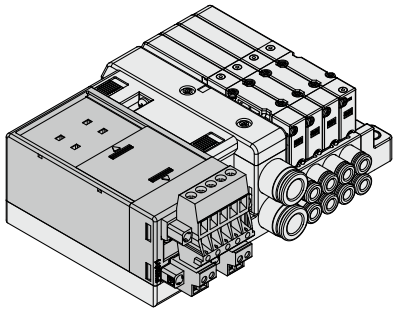

Type 1 EX260 EX123/124/126
Type 2 EX500
Type 3 EX600 EX245 EX250
Type 1 EX120/121/122 EX140 EX180
Type 2 EX510
M8/M12
ATEX

CONTENTS

Type 1 Output type for solenoid valves

Fieldbus System (For Output)
EX180 Series

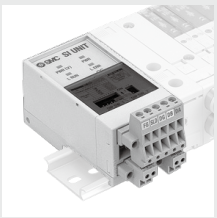

How to Order SI Unit ····· p. 185
Specifications ····· p. 185
Dimensions/Parts Description ····· p. 186
LED Indicator ····· p. 187

Accessories
❶ Communication Connector ····· p. 187
❷ Power Supply Connector ····· p. 187

Made to Order
① EtherCAT PNP (Negative common), 32 outputs ····· p. 188
② AnyWireASLINK NPN (Positive common), 32 outputs ····· p. 188

Specific Product Precautions ····· p. 188

Fieldbus System For Output
EX180 Series

∗ Excludes the S0700.

How to Order SI Unit

EX180 − S DN3 □ − □

Protocol

DN3	DeviceNet™ (32 points Sink/NPN (Positive common))
DN4	DeviceNet™ (16 points Sink/NPN (Positive common))
DN5	DeviceNet™ (32 points Source/PNP (Negative common))
DN6	DeviceNet™ (16 points Source/PNP (Negative common))
MJ3	CC-Link (32 points Sink/NPN (Positive common))
MJ5	CC-Link (32 points Source/PNP (Negative common))

Made to Order (Refer to page 188.)

Protocol
EtherCAT
AnyWireASLINK

Communication connector type

Nil	T-branch type
A	Straight type

∗ Communication and power supply connectors are included.

Specifications

Model			EX180-SDN3 EX180-SDN4	EX180-SDN5 EX180-SDN6	EX180-SMJ3	EX180-SMJ5
Communication	Applicable system	Protocol	DeviceNet™		CC-Link	
		Version∗1	Release 2.0		Ver. 1.10	
	Communication speed		125 k/250 k/500 kbps		156 k/625 kbps 2.5 M/5 M/10 Mbps	
	Configuration file∗2		EDS file		CSP+ file	
	I/O occupation area (Inputs/Outputs)		SDN3: 0/32 SDN4: 0/16	SDN5: 0/32 SDN6: 0/16	32/32 (1 station)	
	Terminating resistor		Not provided		Built into the unit (Switch setting, 110 Ω)	
Power supply voltage	For control		11 to 25 VDC		24 VDC ±10%	
	For valve		24 VDC ±10%/–5%			
Internal current consumption (Unit)			0.1 A or less			
Output	Output type		Sink/NPN (Positive common)	Source/PNP (Negative common)	Sink/NPN (Positive common)	Source/PNP (Negative common)
	Number of outputs		SDN3: 32 outputs SDN4: 16 outputs	SDN5: 32 outputs SDN6: 16 outputs	32 outputs	
	Load		SY3000/5000/7000, SJ2000/3000, S0700 series manifold valves			
	Fail safe		HOLD/CLEAR (Switch setting)			
Environmental resistance	Enclosure		IP20			
	Operating temperature range		–10 to 50°C			
	Operating humidity range		35 to 85%RH (No condensation)			
	Withstand voltage		500 VAC for 1 minute between whole external terminal and FG			
	Insulation resistance		10 MΩ or more (500 VDC) between whole external terminal and FG			
Standards			CE marking (EMC directive/RoHS directive), UL (CSA)			
Weight			110 g or less (including accessory)			
Accessory			Communication connector 1 pc., Power supply connector 1 pc.		Communication connector 1 pc., Power supply connector 2 pcs.	

∗1 Please note that the version is subject to change.
∗2 The setting file can be downloaded from SMC website, http://www.smcworld.com
∗ For detailed specifications other than the above, refer to the operation manual that can be downloaded from SMC website, http://www.smcworld.com
∗ The EX180-SDN1□/2□ cannot be mounted on the manifold for the EX180-SDN3□/4□/5□/6□. Additionally, the EX180-SDN3□/4□/5□/6□ cannot be mounted on the manifold for the EX180-SDN1□/2□.
∗ The EX180-SMJ1□ cannot be mounted on the manifold for the EX180-SMJ3□/5□. Additionally, the EX180-SMJ3□/5□ cannot be mounted on the manifold for the EX180-SMJ1□.

Dimensions/Parts Description

EX180-SDN□

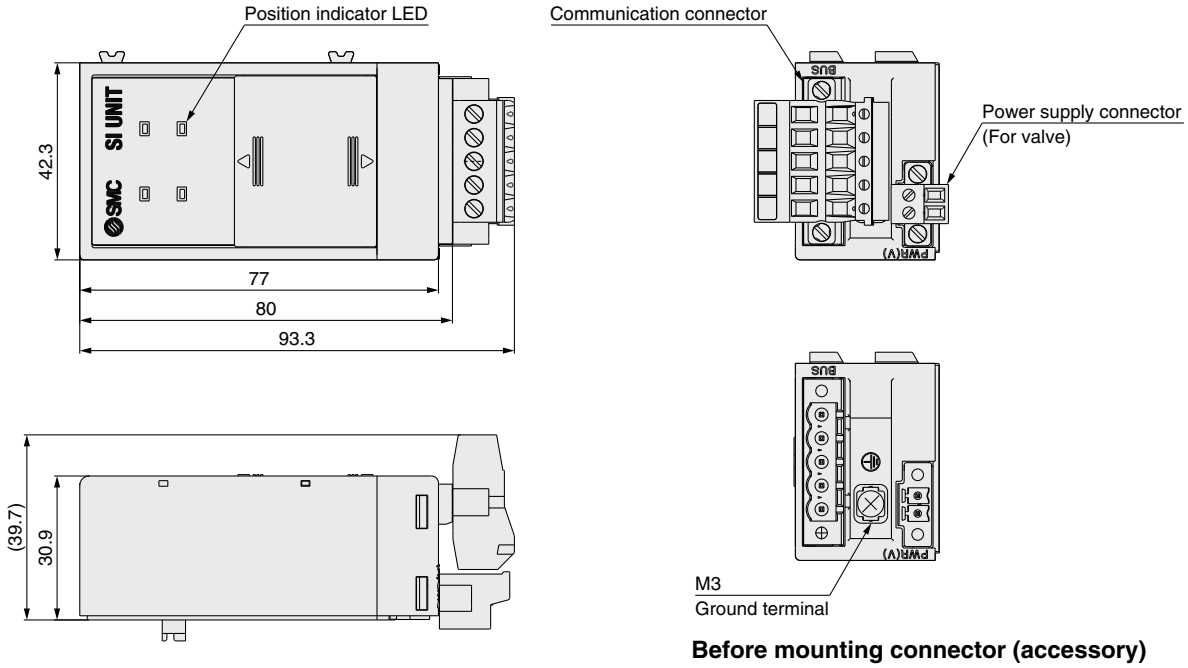

Before mounting connector (accessory)

EX180-SMJ□

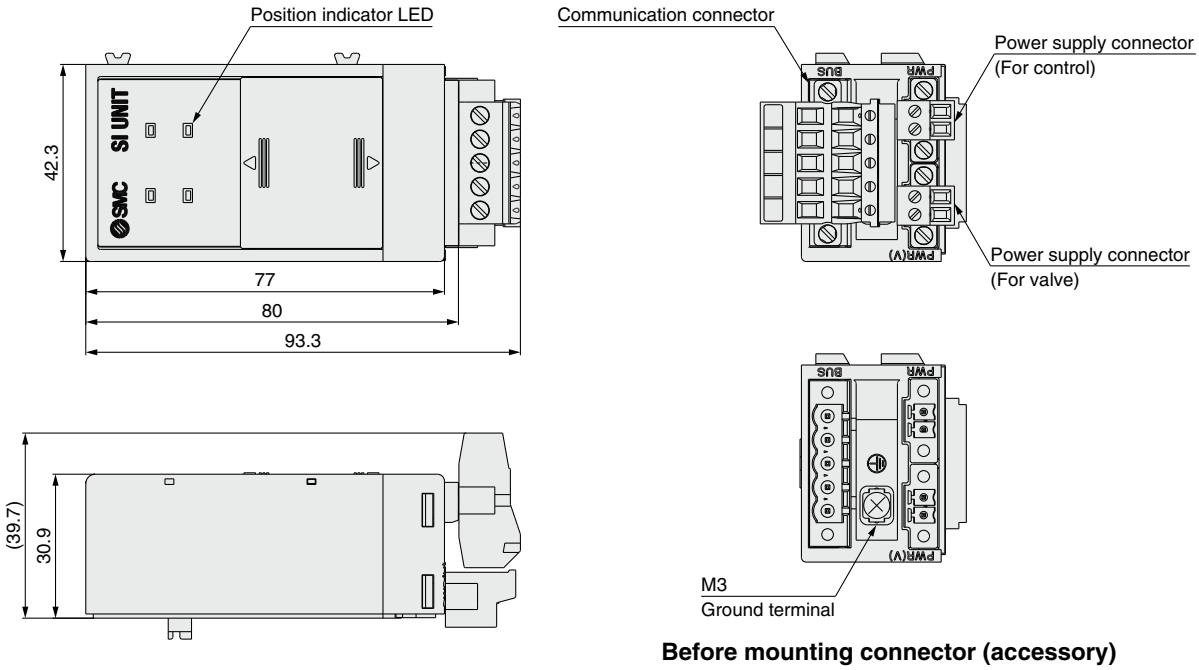

Before mounting connector (accessory)

LED Indicator

EX180-SDN□

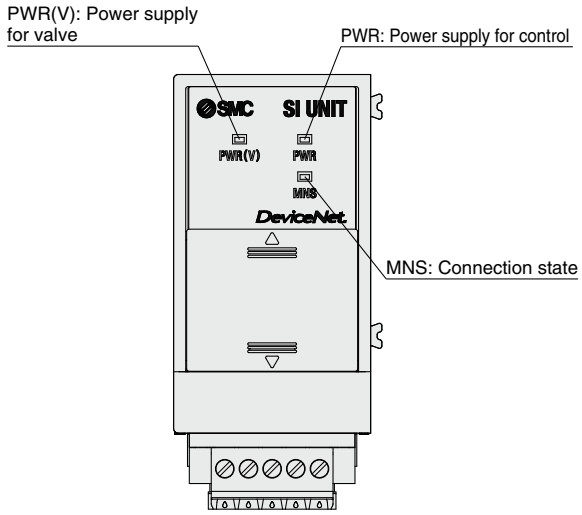

EX180-SMJ□

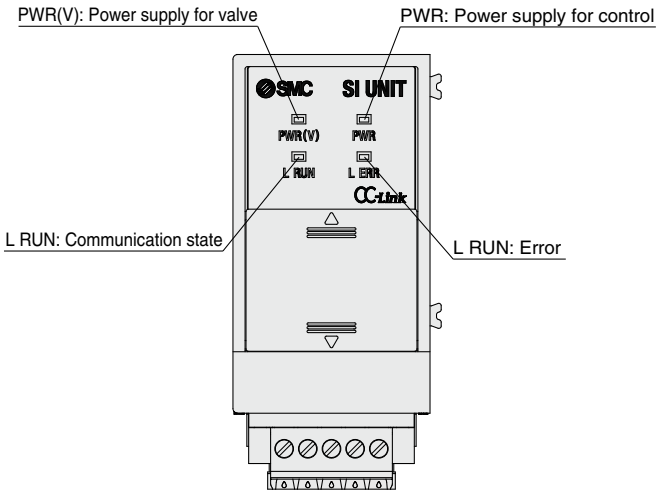

Accessories

❶ Communication Connector

Connector for the network cable
This connector is supplied at the time of shipment.

EX180-C DN 1

Communication protocol

DN	For EX180-SDN□
MJ	For EX180-SMJ□

Communication connector type

1	T-branch type
2	Straight type

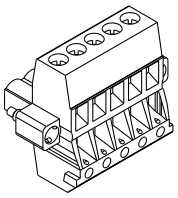

EX180-C□□1

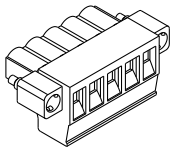

EX180-C□□2

❷ Power Supply Connector

Connector for power supply
This connector is supplied at the time of shipment.

EX180-CP1

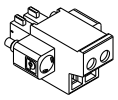

Made to Order

Please contact SMC for detailed specifications and lead times.
Prepare the SI unit and manifold valve (without SI unit) separately, and combine them before use.

① EtherCAT PNP (Negative common), 32 outputs

EX180-SEC5-X230

- The communication connector and power supply connector do not come with this product.

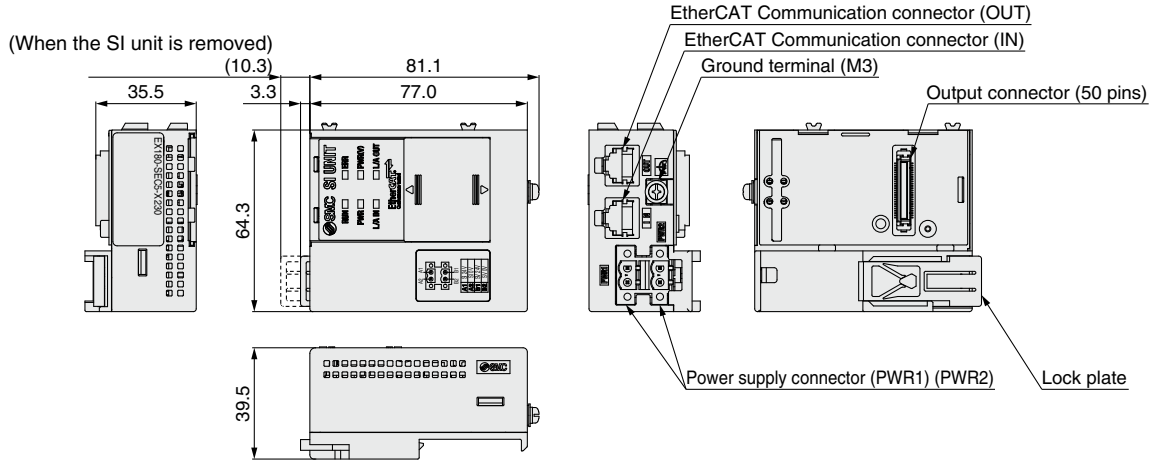

EX9-CP6-X27

- Power supply connector for the EX180-SEC5-X230
- This connector is not supplied at the time of shipment.
- The minimum ordering quantity of this product is one box (50 pcs. included).

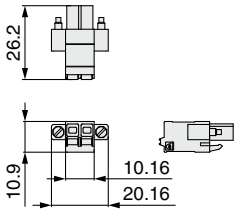

② AnyWireASLINK NPN (Positive common), 32 outputs

EX180-SAW1-X237

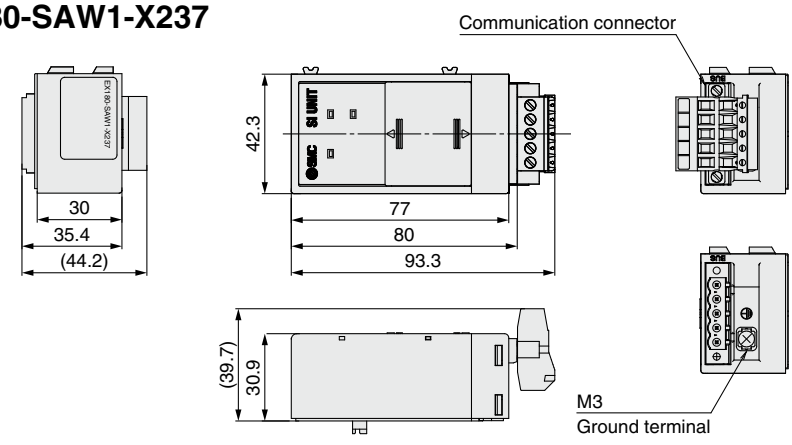

Before mounting connector (accessory)

⚠ Specific Product Precautions

Be sure to read this before handling the products. Refer to page 277 for safety instructions. For fieldbus system precautions, refer to pages 278 to 280 and the "Operation Manual" on the SMC website: http://www.smcworld.com

Operating Environment

⚠Warning

1. Do not use this product in the presence of dust, particles, water, chemicals, and oil. Use around such materials is likely to cause a malfunction or breakage.

■ **Trademark**
DeviceNet™ is a trademark of ODVA.
EtherCAT® is registered trademark and patented technology, licensed by Beckhoff Automation GmbH, Germany.