Slide Table/High Precision Type
LESYH Series

CE UKCA RoHS

＊ For details, refer to page 1343 and onward.

Size : **8,16, 25**

Battery-less Absolute (Step Motor 24 VDC) | AC Servo Motor

Improved positioning repeatability due to the adoption of a ball screw drive.

Positioning repeatability: ±0.01 mm

Lost motion: 0.1 mm or less

Increased vertical work load: 5 times or more

[kg]

Size	8	16	25
LESYH	6	12	20
Existing model **LESH**	0.5	2	4

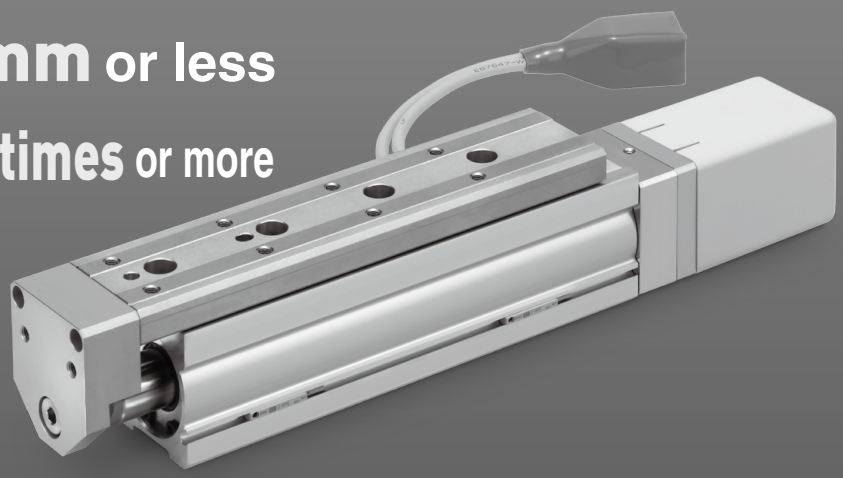

Battery-less Absolute (Step Motor 24 VDC)

Size: 8, 16, 25

In-line motor type

Motor parallel type

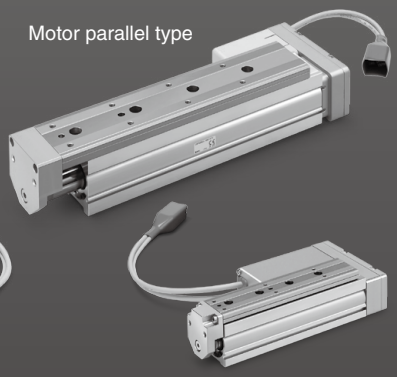

AC Servo Motor

Size: 16, 25

In-line motor type

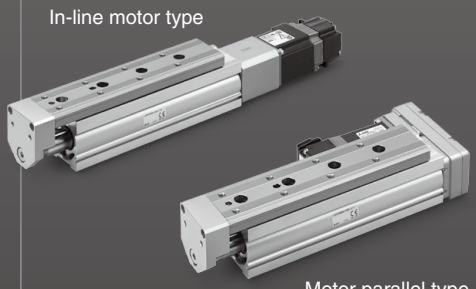

Motor parallel type

Battery-less Absolute (Step Motor 24 VDC)

CE UKCA c UL us

Controllers p. 994

＊ For details, refer to page 1343 and onward.

▶ **Step data input type**
JXC51/61 Series

▶ **EtherCAT/EtherNet/IP™/PROFINET/DeviceNet®/IO-Link/CC-Link direct input type**
JXCE□/91/P1/D1/L□/M1 Series

AC Servo Motor

Drivers p. 1100

CE UKCA c UL us LISTED

＊ For details, refer to page 1343 and onward.

＊ Only the LECSA and LECS□-T are compliant.

▶ **For absolute encoders**

- Pulse input type/ Positioning type
  LECSB-T Series
- CC-Link direct input type
  LECSC-T Series
- SSCNETⅢ/H type
  LECSS-T Series
- MECHATROLINK type
  LECY□ Series

▶ **For incremental encoders**

- Pulse input type/ Positioning type
  LECSA Series

Battery-less Absolute Encoder Type

Restart from the last stop position is possible after recovery of the power supply.

The position information is held by the encoder even when the power supply is turned off. A return to origin operation is not necessary when the power supply is recovered.

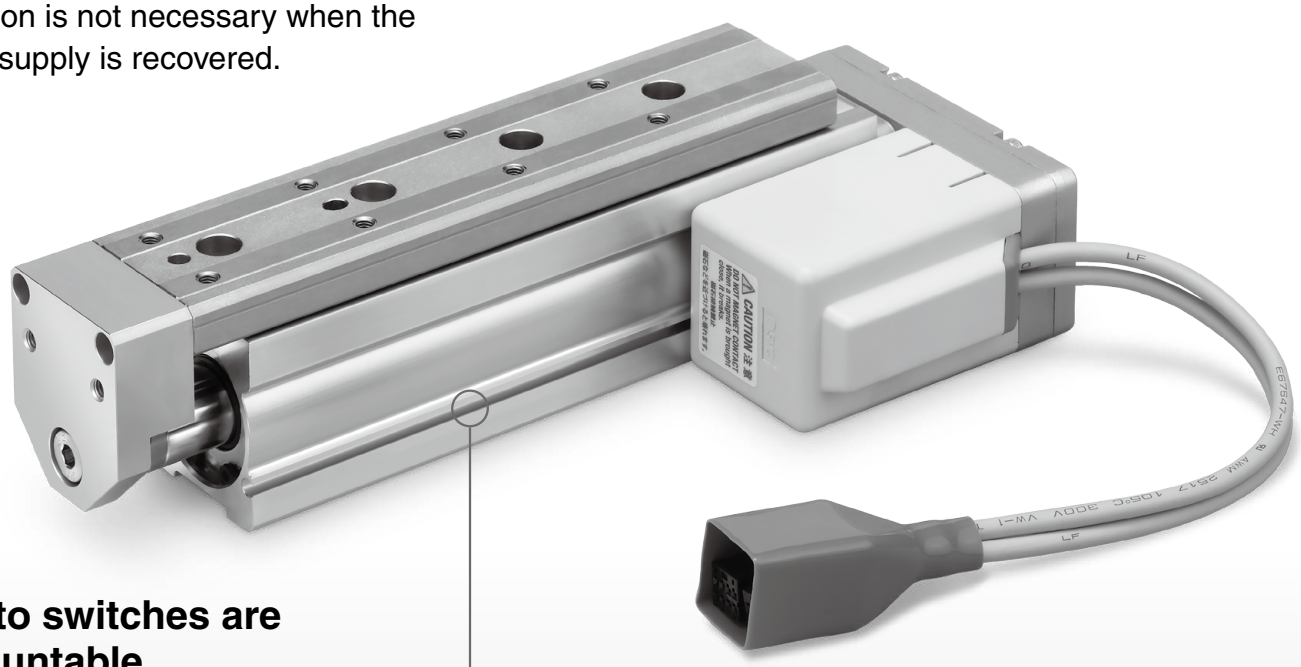

■ Auto switches are mountable.

Mounting groove for auto switches

For checking the limit and the intermediate signal
Applicable to the D-M9□, D-M9□E, and D-M9□W (2-color indicator)

∗ The auto switches should be ordered separately. For details, p. 626

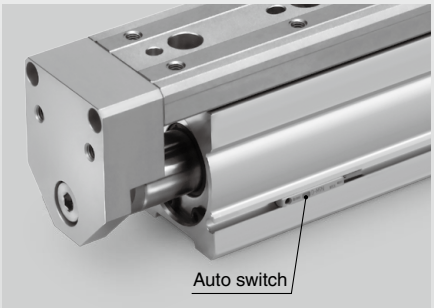

2-color indicator solid state auto switch
Accurate setting of the mounting position can be performed without mistakes.

A green light lights up when within the optimum operating range.

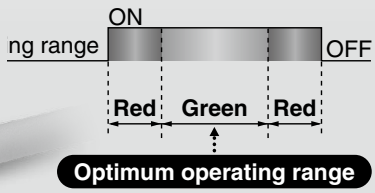

Motor mounting position

Select from 3 directions

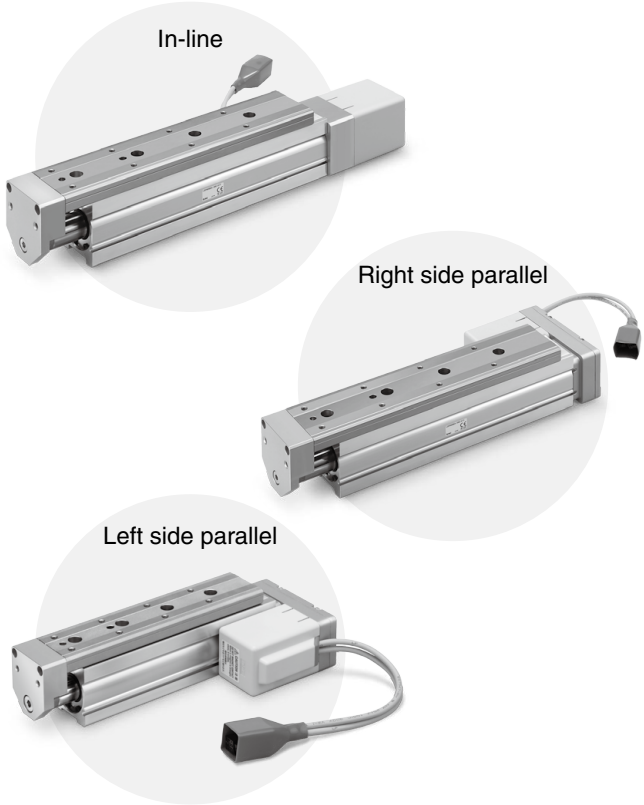

Application examples

● For pick and place operations

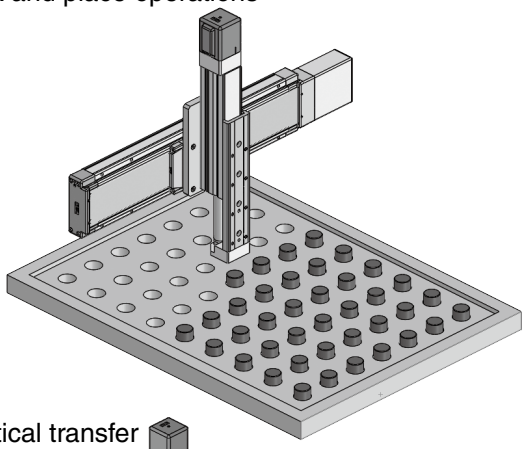

● For vertical transfer (Z axis)

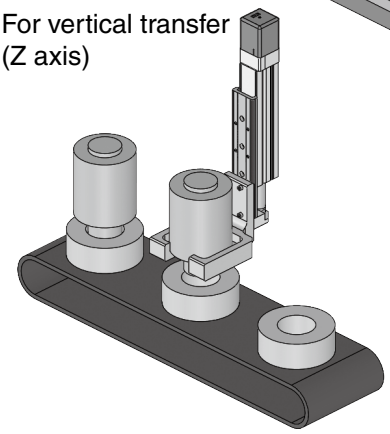

Variations

Series	Size		Lead [mm]	Stroke [mm]	Max. work load [kg]		Max. pushing force [N]	Max. speed [mm/s]
					Horizontal	Vertical		
Battery-less absolute (Step motor 24 VDC) 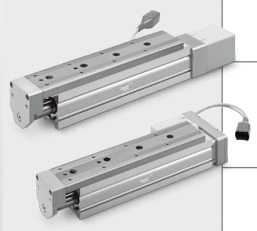	8		10	50, 75	2	1.5	36	400
			5			3	74	200
			2.5			6	138	100
	16		12	50, 100	8	6	182	400
			6			12	348	200
	25		16	50, 100, 150	12	10	218	400
			8			20	420	200
AC servo motor	16		12	50, 100	8	6	131	400
			6			12	255	200
	25	Parallel	20	50, 100, 150	12	10	157	400
			10			20	308	200
		In-line	16			10	197	400
			8			20	385	200

CONTENTS

Slide Table/High Precision Type *LESYH* Series

Slide Table/High Precision Type *LESYH□E* Series Battery-less Absolute (Step Motor 24 VDC)

Model Selection ..... p. 585
How to Order ..... p. 603
Specifications ..... p. 605
Weight ..... p. 605
Construction ..... p. 606
Dimensions ..... p. 607

Slide Table/High Precision Type *LESYH* Series AC Servo Motor *LECS□* Series

Model Selection ..... p. 591
How to Order ..... p. 611
Specifications ..... p. 613, 614
Weight ..... p. 613, 614
Construction ..... p. 615
Dimensions ..... p. 616

Slide Table/High Precision Type *LESYH* Series AC Servo Motor *LECY□* Series

Model Selection ..... p. 597
How to Order ..... p. 619
Specifications ..... p. 621
Weight ..... p. 621
Construction ..... p. 622
Dimensions ..... p. 623

Auto Switch Mounting ..... p. 625
Specific Product Precautions ..... p. 629

Controllers *JXC□* Series

Controller (Step Data Input Type) *JXC51/61* Series Battery-less Absolute (Step Motor 24 VDC)

How to Order ..... p. 1017
Specifications ..... p. 1017
Dimensions ..... p. 1019
Options ..... p. 1023
Actuator Cable ..... p. 1091

Step Motor Controller *JXCE□/91/P1/D1/L□/M1* Series Battery-less Absolute (Step Motor 24 VDC)

How to Order ..... p. 1063
Specifications ..... p. 1064
Dimensions ..... p. 1066
Options ..... p. 1069
Actuator Cable ..... p. 1091

JXC51/61/E□/91/P1/D1/L□/M1 Series Precautions Relating to Differences in Controller Versions ..... p. 1077

AC Servo Motor Drivers *LECSA/LECS□-T/LECY□* Series

AC Servo Motor Driver *LECSA/LECS□-T* Series

How to Order ..... p. 1109
Dimensions ..... p. 1110
Specifications ..... p. 1112
Options ..... p. 1123

AC Servo Motor Driver *LECYM/LECYU* Series

How to Order ..... p. 1128
Dimensions ..... p. 1128
Specifications ..... p. 1129
Options ..... p. 1134

Specific Product Precautions ..... p. 1138

CE/UKCA/UL-compliance List ..... p. 1343

Slide Table/High Precision Type

Battery-less Absolute (Step Motor 24 VDC) *LESYH□E Series* p. 603

AC Servo Motor *LESYH Series* p. 611, 619

Step Motor Controllers p. 994

AC Servo Motor Drivers p. 1100

Model Selection

Selection Procedure

Positioning Control Selection Procedure

Step 1 Check the work load–speed. → **Step 2** Check the cycle time. → **Step 3** Check the allowable moment.

Selection Example

Step 1 **Check the work load–speed. <Speed–Work load graph>** (page 587)

Select a model based on the workpiece mass and speed while referencing the speed–work load graph.

Selection example) The **LESYH16□EB-50** can be temporarily selected as a possible candidate based on the graph shown on the right side.

Operating conditions

- Workpiece mass: 1 [kg]
- Speed: 200 [mm/s]
- Mounting orientation: Vertical
- Stroke: 50 [mm]
- Acceleration/Deceleration: 3000 [mm/s²]
- Cycle time: 0.5 s
- Workpiece mounting condition:

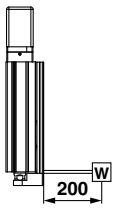

LESYH16□□/Step Motor Vertical

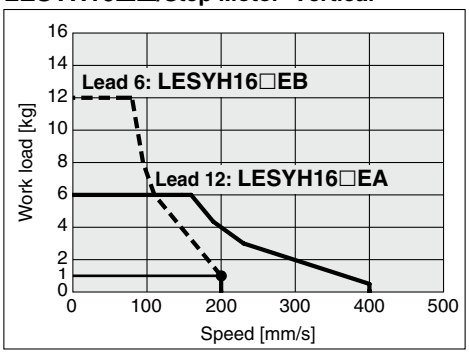

<Speed–Work load graph>

Step 2 **Check the cycle time.**

Calculate **the cycle time** using the following calculation method.

Cycle time:

T can be found from the following equation.

$$T = T1 + T2 + T3 + T4 \text{ [s]}$$

- T1: Acceleration time and T3: Deceleration time can be found by the following equation.

$$T1 = V/a1 \text{ [s]} \qquad T3 = V/a2 \text{ [s]}$$

- T2: Constant speed time can be found from the following equation.

$$T2 = \frac{L - 0.5 \cdot V \cdot (T1 + T3)}{V} \text{ [s]}$$

- T4: Settling time varies depending on the conditions such as motor types, load, and in position of the step data. Therefore, calculate the settling time while referencing the following value.

$$T4 = 0.15 \text{ [s]}$$

Calculation example)
T1 to T4 can be calculated as follows.

$T1 = V/a1 = 200/3000 = 0.07$ [s],

$T3 = V/a2 = 200/3000 = 0.07$ [s]

$$T2 = \frac{L - 0.5 \cdot V \cdot (T1 + T3)}{V} = \frac{50 - 0.5 \cdot 200 \cdot (0.07 + 0.07)}{200} = 0.18 \text{ [s]}$$

$T4 = 0.15$ [s]

The cycle time can be found as follows.

$T = T1 + T2 + T3 + T4$
$= 0.07 + 0.18 + 0.07 + 0.15$
$=$ **0.47 [s]**

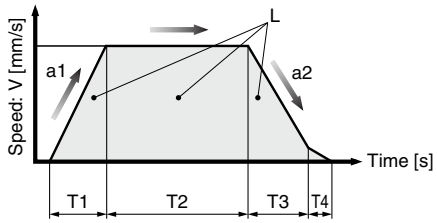

L : Stroke [mm] ····· (Operating condition)
V : Speed [mm/s] ····· (Operating condition)
a1: Acceleration [mm/s²] ··· (Operating condition)
a2: Deceleration [mm/s²] ··· (Operating condition)

T1: Acceleration time [s] ··· Time until reaching the set speed
T2: Constant speed time [s] ··· Time while the actuator is operating at a constant speed
T3: Deceleration time [s] ··· Time from the beginning of the constant speed operation to stop
T4: Settling time [s] ··· Time until positioning is completed

Step 3 **Check the allowable moment.**
<Static allowable moment> (page 587)
<Dynamic allowable moment> (pages 589, 590)

Confirm the moment that applies to the actuator is within the allowable range for both static and dynamic conditions.

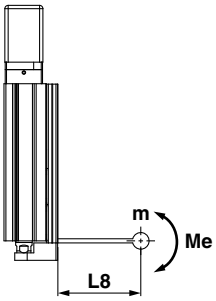

LESYH16/Pitching

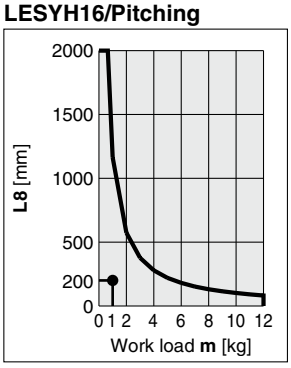

<Dynamic allowable moment>

Based on the above calculation result, the LESYH16□EB-50 should be selected.

Selection Procedure

Pushing Control Selection Procedure

Step 1 Check the required force. → **Step 2** Check the pushing force. → **Step 3** Check the duty ratio. → **Step 4** Check the allowable moment.

Selection Example

Operating conditions

- Pushing force: 150 N
- Workpiece mass: 1 kg
- Speed: 100 mm/s
- Stroke: 100 mm
- Mounting position: Vertical upward
- Pushing time + Operation (A): 1.5 s
- Full cycle time (B): 10 s

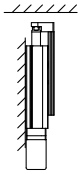

Step 1 **Check the required force.**

Calculate the approximate required force for a pushing operation.
Selection example) ● Pushing force: 150 [N]
● Workpiece mass: 1 [kg]
The approximate required force can be found to be 150 + 10 = 160 [N].
Select a model based on the approximate required force while referencing the specifications (page 605).
Selection example based on the specifications)
● Approximate required force: 160 [N]
● Speed: 100 [mm/s]
The **LESYH16□EA** can be temporarily selected as a possible candidate.
Then, calculate the required force for a pushing operation.
If the mounting position is vertical upward, add the actuator table weight.
Selection example based on the table weight)
● **LESYH16□EA** table weight: 0.7 [kg]
The required force can be found to be 160 + 7 = 167 [N].

Table Weight Unit [kg]

Model	Stroke [mm]			
	50	75	100	150
LESYH8	0.2	0.3	—	—
LESYH16	0.4	—	0.7	—
LESYH25	0.9	—	1.3	1.7

∗ If the mounting position is vertical upward, add the table weight.

LESYH16□E□/Battery-less Absolute

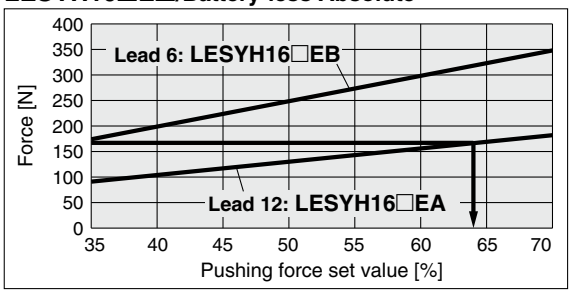

<Pushing force set value–Force graph>

Step 2 **Check the pushing force.**
<Pushing force set value–Force graph> (page 588)

Select a model based on the required force while referencing the pushing force set value–force graph, and confirm the pushing force set value.
Selection example based on the graph shown on the right side)
● Required force: 167 [N]
The **LESYH16□EA** can be temporarily selected as a possible candidate.
The pushing force set value is 64 [%].

Allowable Duty Ratio
Step Motor (Servo 24 VDC)

Pushing force set value [%]	Duty ratio [%]	Continuous pushing time [min]
35	—	—
50 or less	30 or less	5 or less
70 or less	20 or less	3 or less

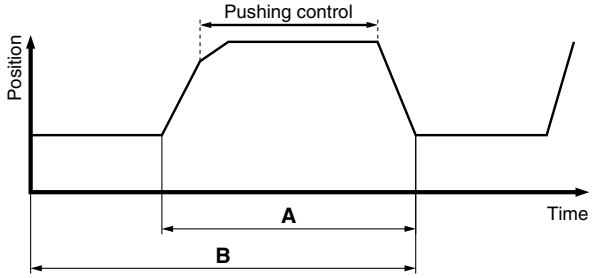

Step 3 **Check the duty ratio.**

Confirm the allowable duty ratio based on the pushing force set value while referencing the allowable duty ratio.
Selection example based on the allowable duty ratio)
● Pushing force set value: 64 [%]
The allowable duty ratio can be found to be 20 [%].
Calculate the duty ratio for the operating conditions, and confirm it does not exceed the allowable duty ratio.
Selection example) ● Pushing time + Operation (A): 1.5 s
● Full cycle time (B): 10 s
The duty ratio can be found to be 1.5/10 x 100 = 15 [%], and this is within the allowable range.

Step 4 **Check the allowable moment.**
<Static allowable moment> (page 587)
<Dynamic allowable moment> (pages 589, 590)

Confirm the moment that applies to the actuator is within the allowable range for both static and dynamic conditions.

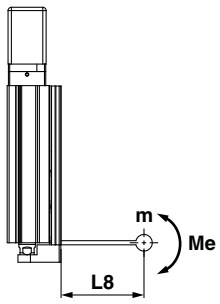

LESYH16/Pitching

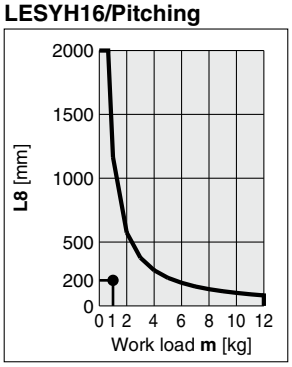

<Dynamic allowable moment>

Based on the above calculation result, the LESYH16□EA-100 should be selected.

Speed–Work Load Graph (Guide)

LESYH8□E

Horizontal

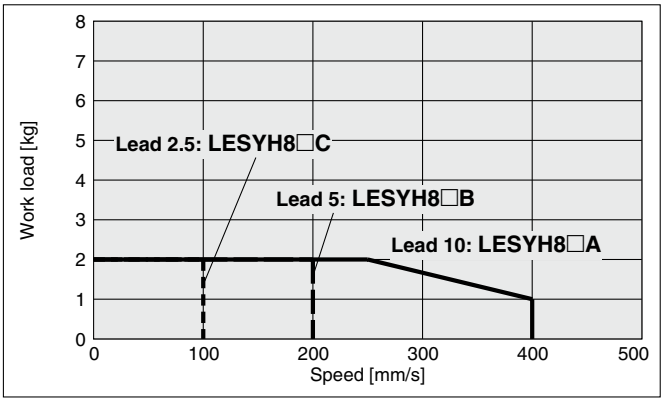

Vertical

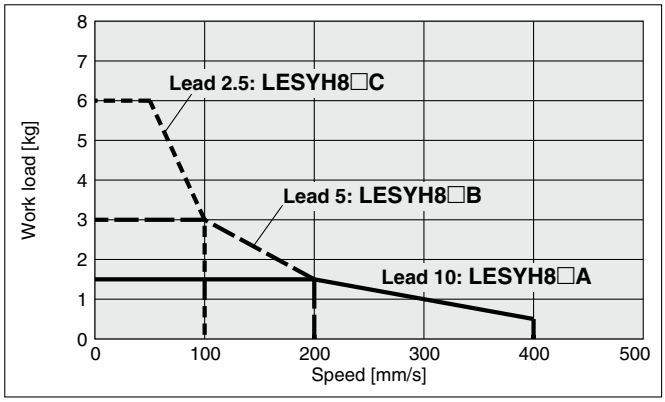

LESYH16□E

Horizontal

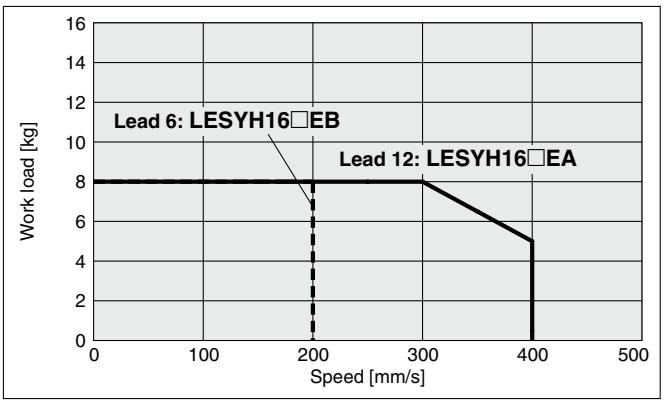

Vertical

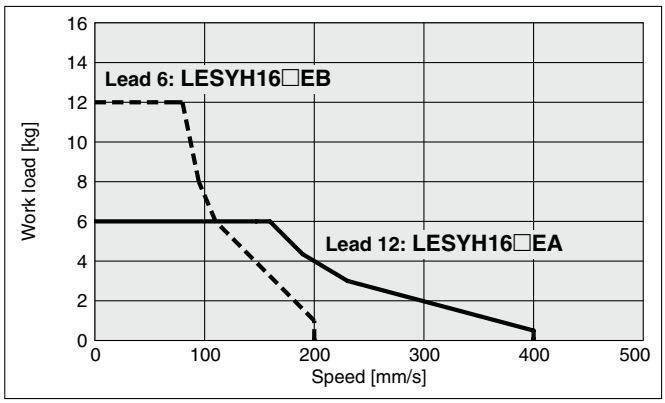

LESYH25□E

Horizontal

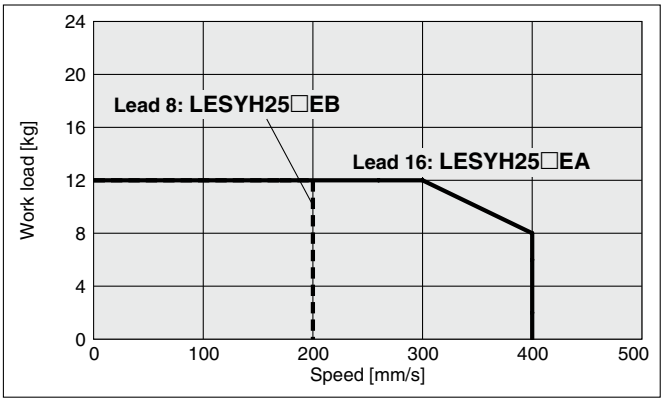

Vertical

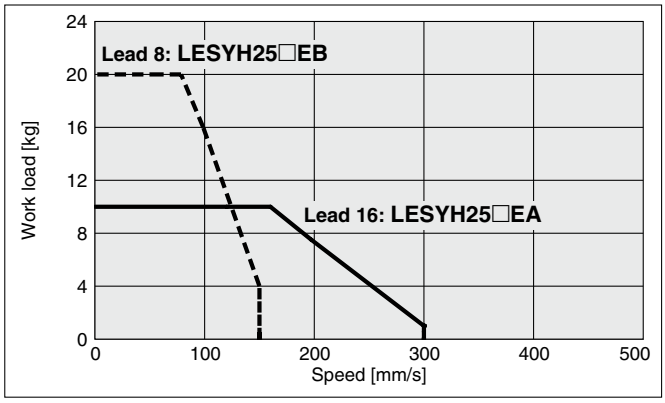

Static Allowable Moment

Model	LESYH8		LESYH16		LESYH25		
Stroke [mm]	50	75	50	100	50	100	150
Pitching [N·m]	11		26	43	77	112	155
Yawing [N·m]							
Rolling [N·m]	12		48		146	177	152

Pushing Force Set Value–Force Graph

LESYH8□E□

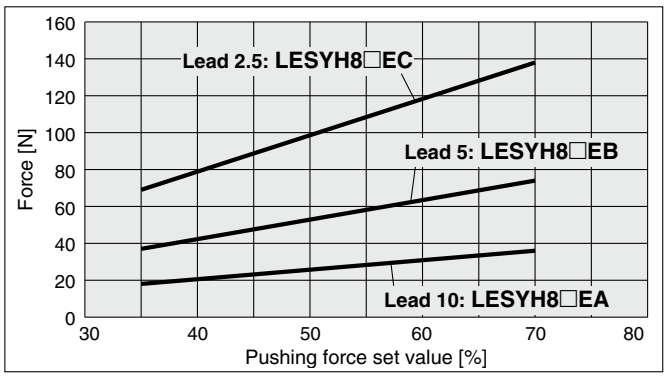

LESYH16□E□

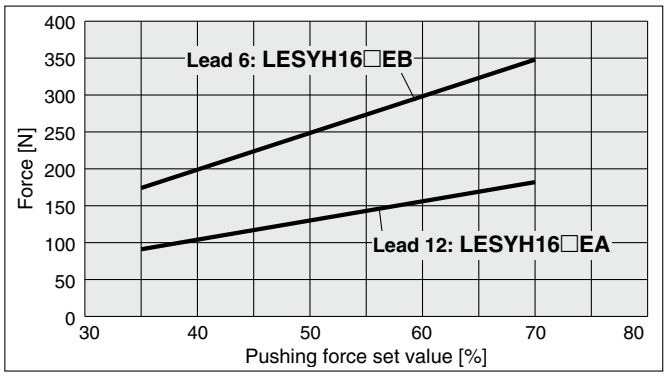

LESYH25□E□

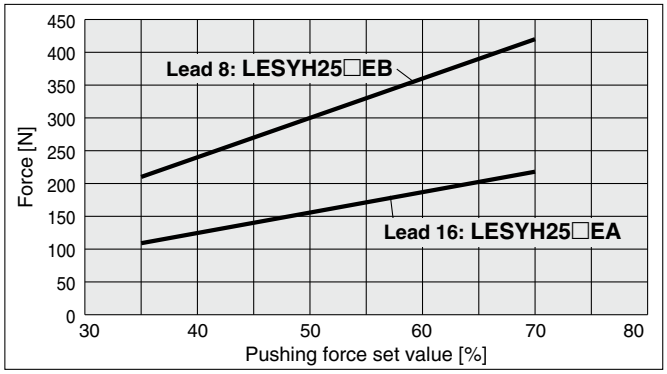

Dynamic Allowable Moment

∗ These graphs show the amount of allowable overhang (guide unit) when the center of gravity of the work-piece overhangs in one direction. When selecting the overhang, refer to the "Calculation of Guide Load Factor" or the Electric Actuator Model Selection Software for confirmation: https://www.smcworld.com

Acceleration/Deceleration ——— 5000 mm/s²

Orientation	Load overhanging direction **m**: Work load [kg] **Me**: Allowable moment [N·m] **L**: Overhang to the work load center of gravity [mm]		Model		
			LESYH8	**LESYH16**	**LESYH25**
Horizontal/Bottom	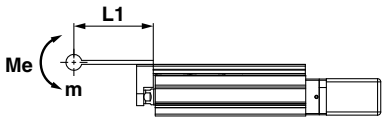	X	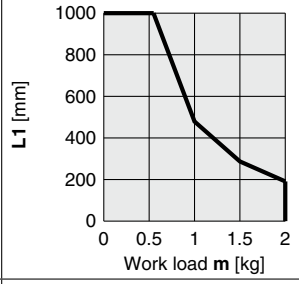	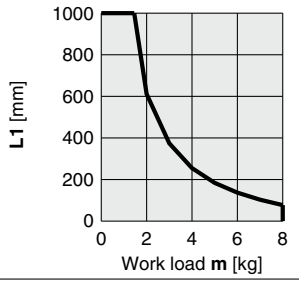	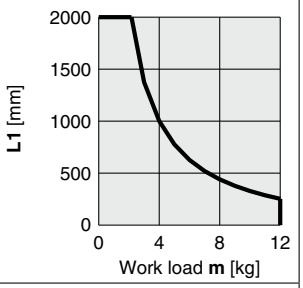
	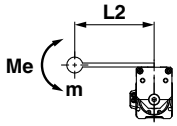	Y	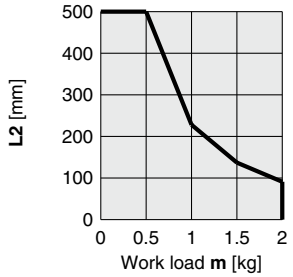	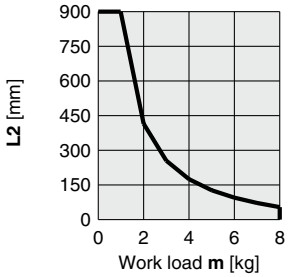	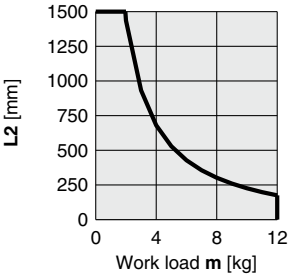
	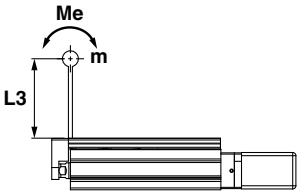	Z	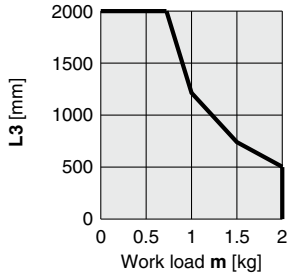	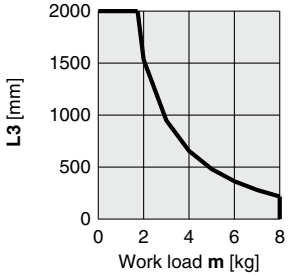	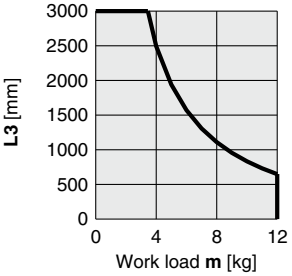
Horizontal (Wall)	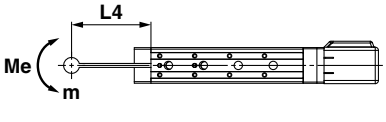	X	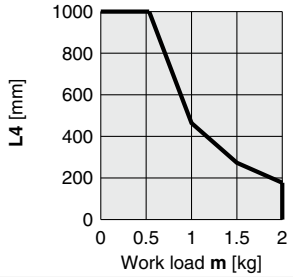	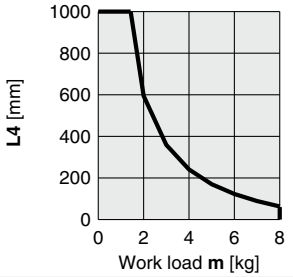	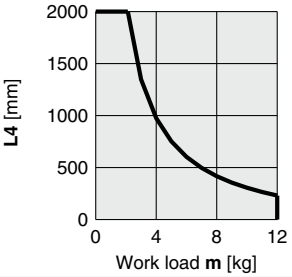
	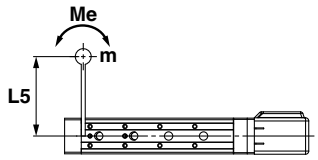	Y	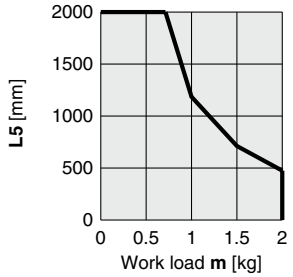	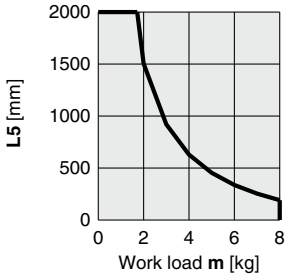	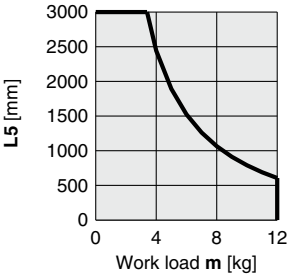
	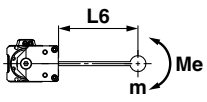	Z	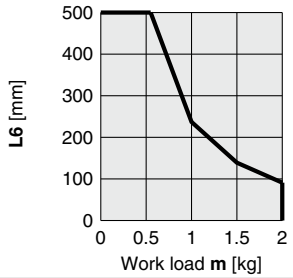	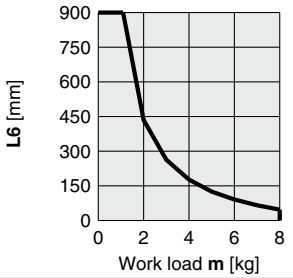	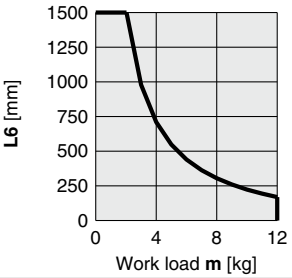

Dynamic Allowable Moment

∗ These graphs show the amount of allowable overhang (guide unit) when the center of gravity of the work-piece overhangs in one direction. When selecting the overhang, refer to the "Calculation of Guide Load Factor" or the Electric Actuator Model Selection Software for confirmation: https://www.smcworld.com

Acceleration/Deceleration —— 5000 mm/s²

Orientation	Load overhanging direction **m**: Work load [kg] **Me**: Allowable moment [N·m] **L**: Overhang to the work load center of gravity [mm]		Model		
			LESYH8	**LESYH16**	**LESYH25**
Vertical	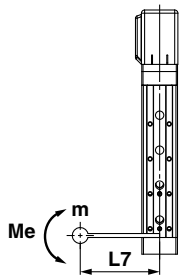	Y	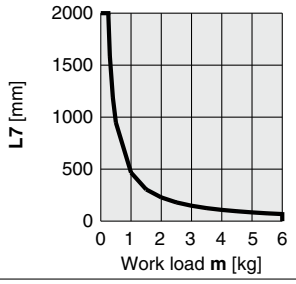	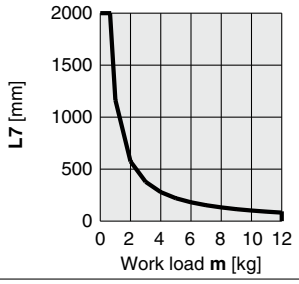	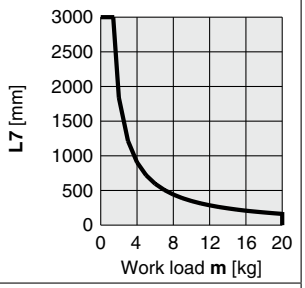
	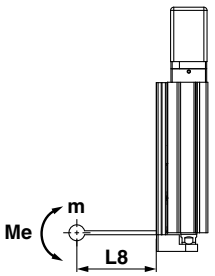	Z	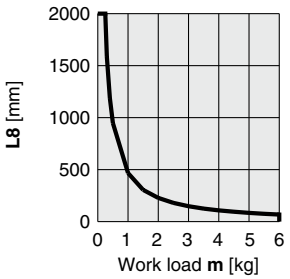	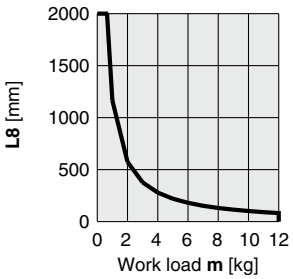	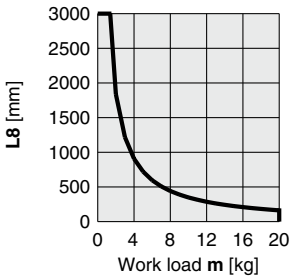

Calculation of Guide Load Factor

1. Decide operating conditions.
   Model: LESYH
   Size: 16
   Mounting orientation: Horizontal/Bottom/Wall/Vertical
   Acceleration [mm/s²]: **a**
   Work load [kg]: **m**
   Work load center position [mm]: **Xc/Yc/Zc**
2. Select the target graph while referencing the model, size, and mounting orientation.
3. Based on the acceleration and work load, find the overhang [mm]: **Lx/Ly/Lz** from the graph.
4. Calculate the load factor for each direction.
   $\alpha x = Xc/Lx$, $\alpha y = Yc/Ly$, $\alpha z = Zc/Lz$
5. Confirm the total of αx, αy, and αz is 1 or less.
   $\alpha x + \alpha y + \alpha z \leq 1$
   When 1 is exceeded, consider a reduction of acceleration and work load, or a change of the work load center position and series.

Mounting orientation

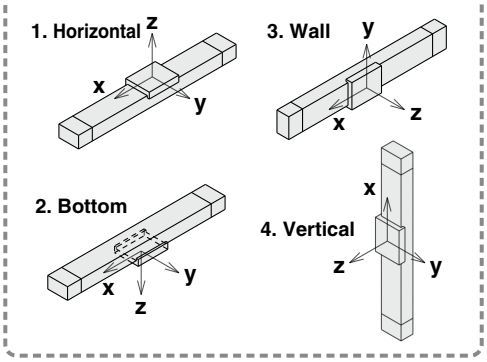

Example

1. Operating conditions
   Model: LESYH
   Size: 16
   Mounting orientation: Horizontal
   Acceleration [mm/s²]: 5000
   Work load [kg]: 4.0
   Work load center position [mm]: **Xc = 80**, **Yc = 50**, **Zc = 60**
2. Select three graphs from the top of the second row on page 589.
3. **Lx = 250 mm**, **Ly = 160 mm**, **Lz = 700 mm**
4. The load factor for each direction can be found as follows.
   $\alpha x = 80/250 = 0.32$
   $\alpha y = 50/160 = 0.32$
   $\alpha z = 60/700 = 0.09$
5. $\alpha x + \alpha y + \alpha z = 0.73 \leq 1$

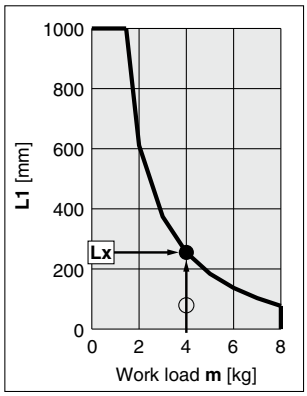

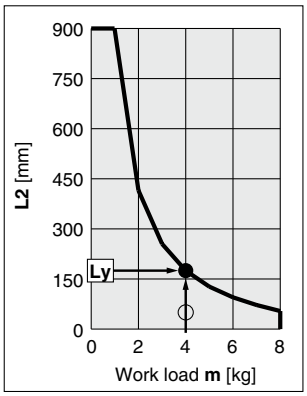

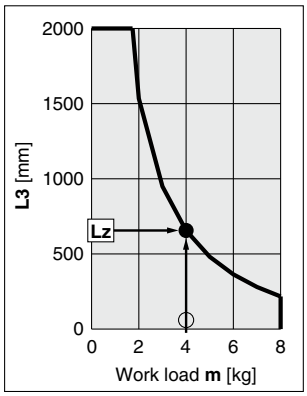

Model Selection

Selection Procedure

Positioning Control Selection Procedure

Step 1 Check the work load–speed. → **Step 2** Check the cycle time. → **Step 3** Check the allowable moment.

Selection Example

Step 1 **Check the work load–speed. <Speed–Work load graph>** (page 593)

Select a model based on the workpiece mass and speed while referencing the speed–work load graph.

Selection example) The **LESYH16□B-50** can be temporarily selected as a possible candidate based on the graph shown on the right side.

The regeneration option may be necessary. Refer to page 593 for the "Required Conditions for the Regeneration Option."

Operating conditions

- Workpiece mass: 1 [kg]
- Speed: 200 [mm/s]
- Mounting orientation: Vertical
- Stroke: 50 [mm]
- Acceleration/Deceleration: 3000 [mm/s²]
- Cycle time: 0.5 s
- Workpiece mounting condition:

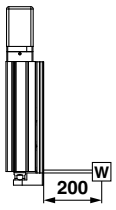

LESYH16□□/AC Servo Motor Vertical

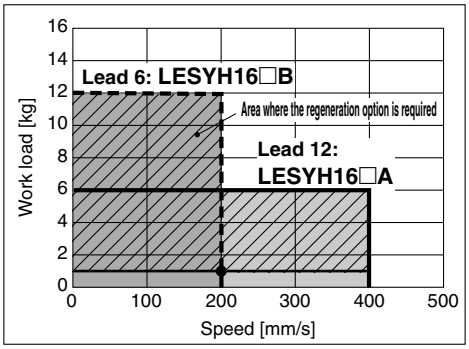

<Speed–Work load graph>

Step 2 **Check the cycle time.**

Calculate **the cycle time** using the following calculation method.

Cycle time:
T can be found from the following equation.

$T = T1 + T2 + T3 + T4$ [s]

- T1: Acceleration time and T3: Deceleration time can be found by the following equation.

  $T1 = V/a1$ [s] $T3 = V/a2$ [s]

- T2: Constant speed time can be found from the following equation.

  $$T2 = \frac{L - 0.5 \cdot V \cdot (T1 + T3)}{V} \text{ [s]}$$

- T4: Settling time varies depending on the conditions such as motor types, load, and in position of the step data. Therefore, calculate the settling time while referencing the following value.

  $T4 = 0.15$ [s]

Calculation example)
T1 to T4 can be calculated as follows.

$T1 = V/a1 = 200/3000 = 0.07$ [s],

$T3 = V/a2 = 200/3000 = 0.07$ [s]

$$T2 = \frac{L - 0.5 \cdot V \cdot (T1 + T3)}{V} = \frac{50 - 0.5 \cdot 200 \cdot (0.07 + 0.07)}{200} = 0.18 \text{ [s]}$$

$T4 = 0.15$ [s]

The cycle time can be found as follows.

$T = T1 + T2 + T3 + T4$
$= 0.07 + 0.18 + 0.07 + 0.15$
$=$ **0.47 [s]**

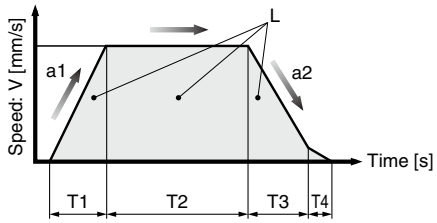

L : Stroke [mm] ····· (Operating condition)
V : Speed [mm/s] ····· (Operating condition)
a1: Acceleration [mm/s²] ··· (Operating condition)
a2: Deceleration [mm/s²] ··· (Operating condition)

T1: Acceleration time [s] ··· Time until reaching the set speed
T2: Constant speed time [s] ··· Time while the actuator is operating at a constant speed
T3: Deceleration time [s] ··· Time from the beginning of the constant speed operation to stop
T4: Settling time [s] ··· Time until positioning is completed

Step 3 **Check the allowable moment.**
<Static allowable moment> (page 587)
<Dynamic allowable moment> (pages 589, 590)

Confirm the moment that applies to the actuator is within the allowable range for both static and dynamic conditions.

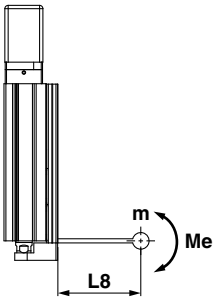

LESYH16/Pitching

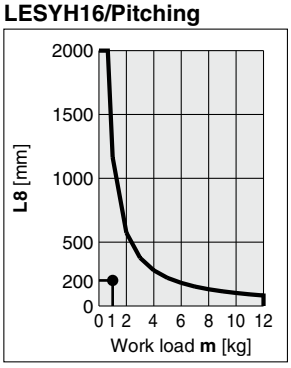

<Dynamic allowable moment>

Based on the above calculation result, the LESYH16□B-50 should be selected.

Selection Procedure

Force Control Selection Procedure

Step 1 Check the required force. → **Step 2** Check the pushing force. → **Step 3** Check the duty ratio. → **Step 4** Check the allowable moment.

Selection Example

Operating conditions

- Pushing force: 210 N
- Workpiece mass: 1 kg
- Speed: 100 mm/s
- Stroke: 100 mm
- Mounting position: Vertical upward
- Pushing time + Operation (A): 5 s
- Full cycle time (B): 10 s

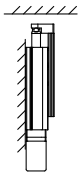

Step 1 **Check the required force.**

Calculate the approximate required force for a pushing operation.
Selection example) ● Pushing force: 210 [N]
● Workpiece mass: 1 [kg]
The approximate required force can be found to be 210 + 10 = 220 [N].
Select a model based on the approximate required force while referencing the specifications (page 613).
Selection example based on the specifications)
● Approximate required force: 220 [N]
● Speed: 100 [mm/s]
The **LESYH16□B** can be temporarily selected as a possible candidate.
Then, calculate the required force for a pushing operation. If the mounting position is vertical upward, add the actuator table weight.
Selection example based on the table weight)
● **LESYH16□B** table weight: 0.7 [kg]
The required force can be found to be 220 + 7 = 227 [N].

Table Weight Unit [kg]

Model	Stroke [mm]		
	50	100	150
LESYH16	0.4	0.7	—
LESYH25	0.9	1.3	1.7

∗ If the mounting position is vertical upward, add the table weight.

LESYH16

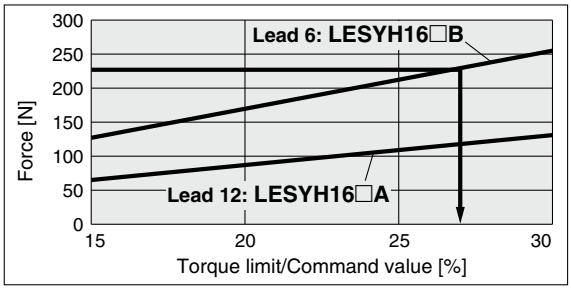

<Force conversion graph>

Step 2 **Check the pushing force.**
<Force conversion graph>

Select a model based on the required force while referencing the force conversion graph, and confirm the torque limit/command value.
Selection example) Based on the graph shown on the right side,
● Required force: 227 [N]
The **LESYH16□B** can be temporarily selected as a possible candidate.
The torque limit/command value is 27 [%].

Allowable Duty Ratio
LESYH16/AC Servo Motor

Torque limit/Command value [%]	Duty ratio [%]	Continuous pushing time [min]
25 or less	100	—
30	60	1.5

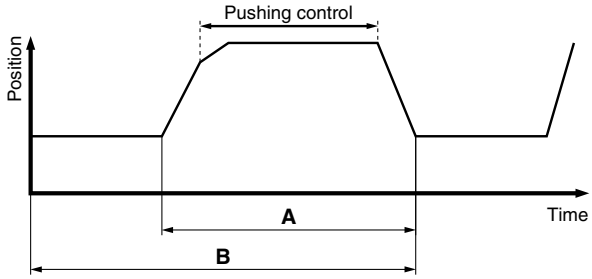

Step 3 **Check the duty ratio.**

Confirm the allowable duty ratio based on the torque limit/command value while referencing the allowable duty ratio.
Selection example based on the allowable duty ratio)
● Torque limit/Command value: 27 [%]
The allowable duty ratio can be found to be 60 [%].
Calculate the duty ratio for the operating conditions, and confirm it does not exceed the allowable duty ratio.
Selection example) ● Pushing time + Operation (A): 5 s
● Full cycle time (B): 10 s
The duty ratio can be found to be 5/10 x 100 = 50 [%], and this is within the allowable range.

Step 4 **Check the allowable moment.**
<Static allowable moment> (page 587)
<Dynamic allowable moment> (pages 589, 590)

Confirm the moment that applies to the actuator is within the allowable range for both static and dynamic conditions.

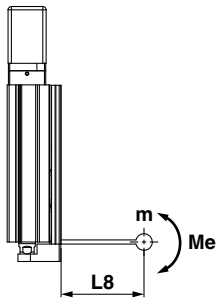

LESYH16/Pitching

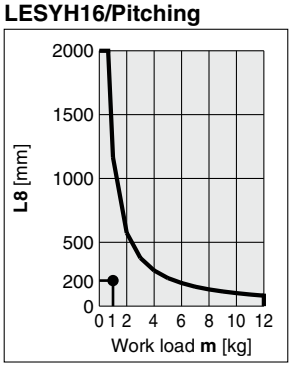

<Dynamic allowable moment>

Based on the above calculation result, the LESYH16□B-100 should be selected.

Speed–Work Load Graph/Required Conditions for the Regeneration Option

LESYH16□S2/T6

Horizontal

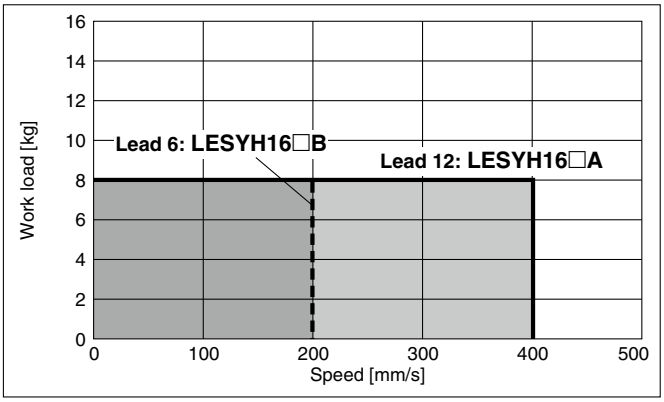

Vertical

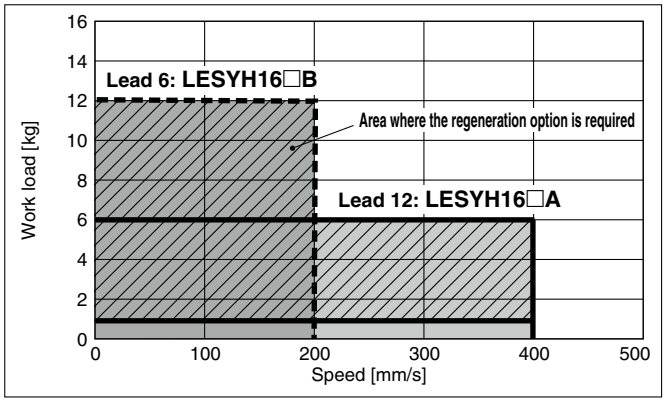

LESYH25□S3/T7

Horizontal

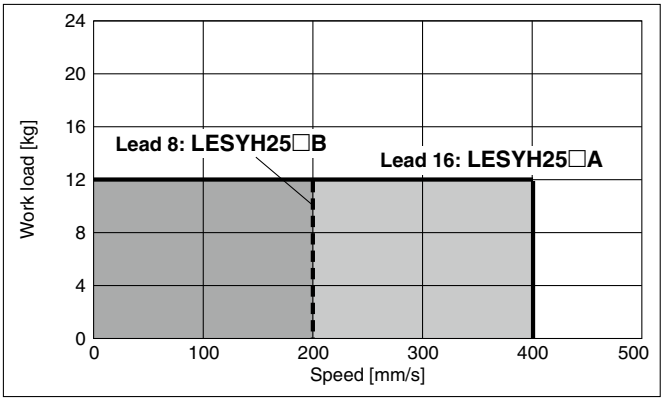

Vertical

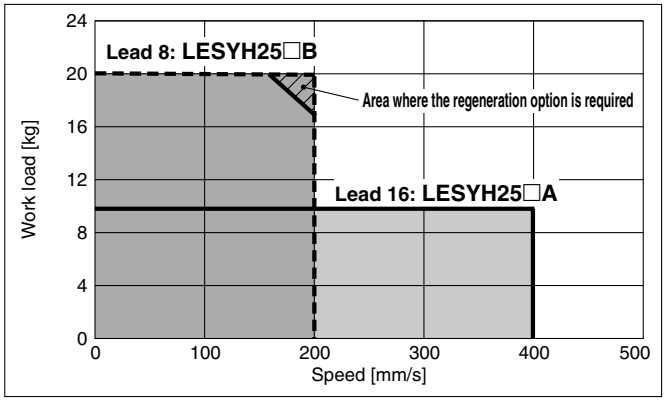

Required conditions for the regeneration option

∗ The regeneration option is required when using the product above the regeneration line in the graph. (It must be ordered separately.)

Regeneration Option Model

Size	Model
16	LEC-MR-RB-032
25	

Force Conversion Graph (Guide): LECSA

LESYH16□S2 (Motor mounting position: Parallel/In-line)

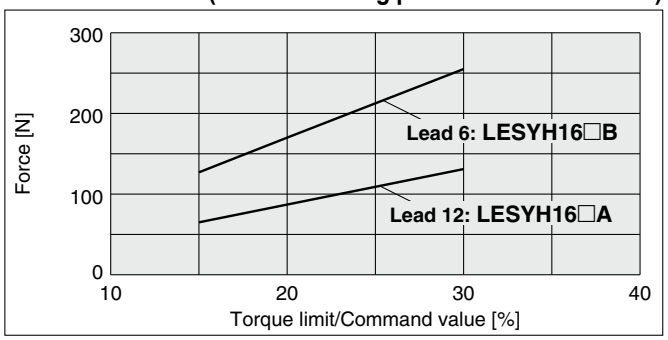

Torque limit/Command value [%]	Duty ratio [%]	Continuous pushing time [min]
25 or less	100	—
30	60	1.5

LESYH25□S3 (Motor mounting position: Parallel)

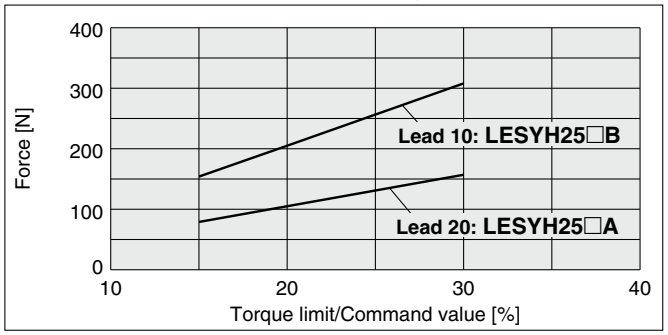

Torque limit/Command value [%]	Duty ratio [%]	Continuous pushing time [min]
25 or less	100	—
30	60	1.5

LESYH25DS3 (Motor mounting position: In-line)

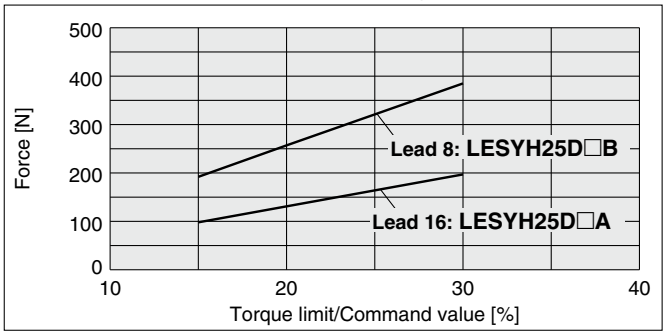

Torque limit/Command value [%]	Duty ratio [%]	Continuous pushing time [min]
25 or less	100	—
30	60	1.5

Force Conversion Graph (Guide): LECS□-T

LESYH16□T6 (Motor mounting position: Parallel/In-line)

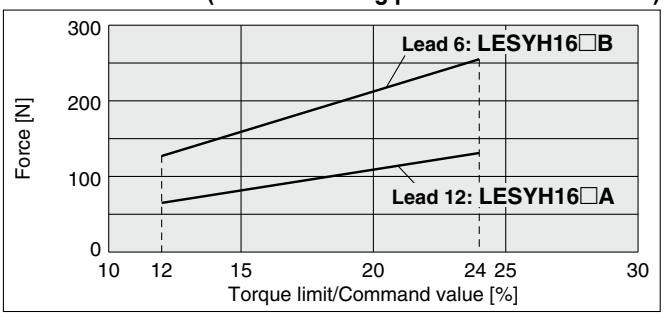

Torque limit/Command value [%]	Duty ratio [%]	Continuous pushing time [min]
20 or less	100	—
24	60	1.5

LESYH25□T7 (Motor mounting position: Parallel)

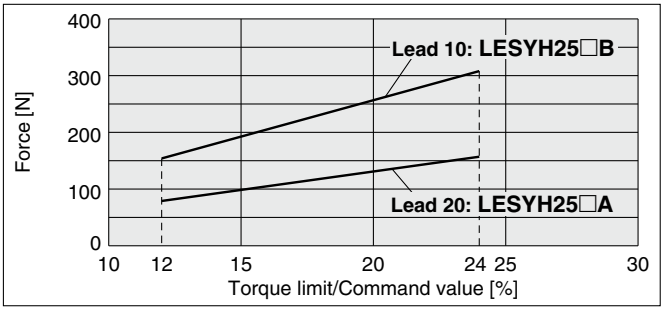

Torque limit/Command value [%]	Duty ratio [%]	Continuous pushing time [min]
20 or less	100	—
24	60	1.5

LESYH25DT7 (Motor mounting position: In-line)

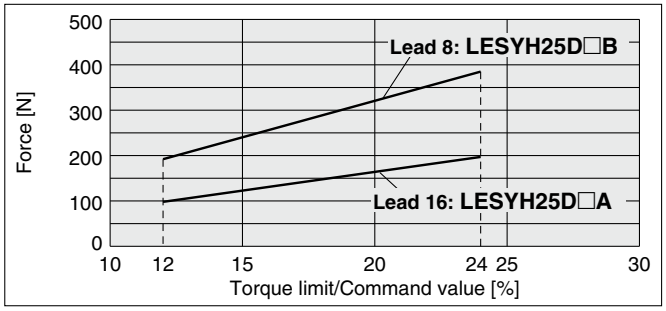

Torque limit/Command value [%]	Duty ratio [%]	Continuous pushing time [min]
20 or less	100	—
24	60	1.5

Model Selection

Selection Procedure

Positioning Control Selection Procedure

Step 1 Check the work load–speed. → **Step 2** Check the cycle time. → **Step 3** Check the allowable moment.

Selection Example

Step 1 **Check the work load–speed. <Speed–Work load graph>** (page 599)

Select a model based on the workpiece mass and speed while referencing the speed–work load graph.

Selection example) The **LESYH16□B-50** can be temporarily selected as a possible candidate based on the graph shown on the right side.

The regenerative resistor may be necessary. Refer to page 599 for the "Required Conditions for the Regenerative Resistor (Guide)."

Operating conditions

- Workpiece mass: 1 [kg]
- Speed: 200 [mm/s]
- Mounting orientation: Vertical
- Stroke: 50 [mm]
- Acceleration/Deceleration: 3000 [mm/s²]
- Cycle time: 0.5 s
- Workpiece mounting condition:

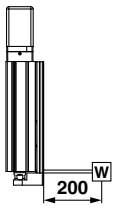

LESYH16□□/AC Servo Motor Vertical

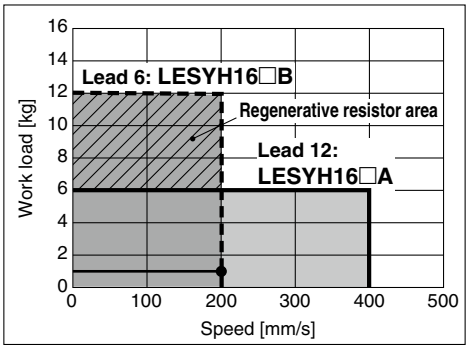

<Speed–Work load graph>

Step 2 **Check the cycle time.**

Calculate **the cycle time** using the following calculation method.

Cycle time:
T can be found from the following equation.

$T = T1 + T2 + T3 + T4$ [s]

- T1: Acceleration time and T3: Deceleration time can be found by the following equation.

  $T1 = V/a1$ [s] $T3 = V/a2$ [s]

- T2: Constant speed time can be found from the following equation.

  $$T2 = \frac{L - 0.5 \cdot V \cdot (T1 + T3)}{V} \text{ [s]}$$

- T4: Settling time varies depending on the conditions such as motor types, load, and in position of the step data. Therefore, calculate the settling time while referencing the following value.

  $T4 = 0.15$ [s]

Calculation example)
T1 to T4 can be calculated as follows.

$T1 = V/a1 = 200/3000 = 0.07$ [s],

$T3 = V/a2 = 200/3000 = 0.07$ [s]

$$T2 = \frac{L - 0.5 \cdot V \cdot (T1 + T3)}{V} = \frac{50 - 0.5 \cdot 200 \cdot (0.07 + 0.07)}{200} = 0.18 \text{ [s]}$$

$T4 = 0.15$ [s]

The cycle time can be found as follows.

$T = T1 + T2 + T3 + T4$
$= 0.07 + 0.18 + 0.07 + 0.15$
$=$ **0.47 [s]**

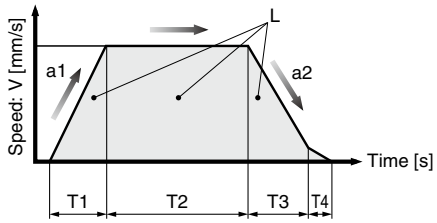

L : Stroke [mm] ····· (Operating condition)
V : Speed [mm/s] ····· (Operating condition)
a1: Acceleration [mm/s²] ··· (Operating condition)
a2: Deceleration [mm/s²] ··· (Operating condition)

T1: Acceleration time [s] ··· Time until reaching the set speed
T2: Constant speed time [s] ··· Time while the actuator is operating at a constant speed
T3: Deceleration time [s] ··· Time from the beginning of the constant speed operation to stop
T4: Settling time [s] ··· Time until positioning is completed

Step 3 **Check the allowable moment.**
<Static allowable moment> (page 587)
<Dynamic allowable moment> (pages 589, 590)

Confirm the moment that applies to the actuator is within the allowable range for both static and dynamic conditions.

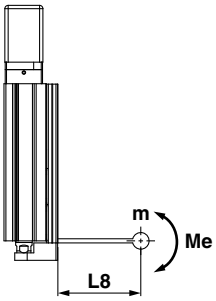

LESYH16/Pitching

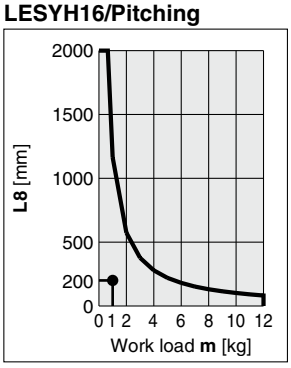

<Dynamic allowable moment>

Based on the above calculation result, the LESYH16□B-50 should be selected.

Selection Procedure

Force Control Selection Procedure

Step 1 Check the required force. → **Step 2** Check the pushing force. → **Step 3** Check the duty ratio. → **Step 4** Check the allowable moment.

Selection Example

Operating conditions

- Pushing force: 210 N
- Workpiece mass: 1 kg
- Speed: 100 mm/s
- Stroke: 100 mm
- Mounting position: Vertical upward
- Pushing time + Operation (A): 5 s
- Full cycle time (B): 10 s

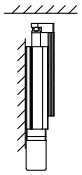

Step 1 **Check the required force.**

Calculate the approximate required force for a pushing operation.
Selection example) ● Pushing force: 210 [N]
● Workpiece mass: 1 [kg]
The approximate required force can be found to be 210 + 10 = 220 [N].
Select a model based on the approximate required force while referencing the specifications (page 621).
Selection example based on the specifications)
● Approximate required force: 220 [N]
● Speed: 100 [mm/s]
The **LESYH16□B** can be temporarily selected as a possible candidate.
Then, calculate the required force for a pushing operation. If the mounting position is vertical upward, add the actuator table weight.
Selection example based on the table weight)
● **LESYH16□B** table weight: 0.7 [kg]
The required force can be found to be 220 + 7 = 227 [N].

Table Weight Unit [kg]

Model	Stroke [mm]		
	50	100	150
LESYH16	0.4	0.7	—
LESYH25	0.9	1.3	1.7

∗ If the mounting position is vertical upward, add the table weight.

LESYH16

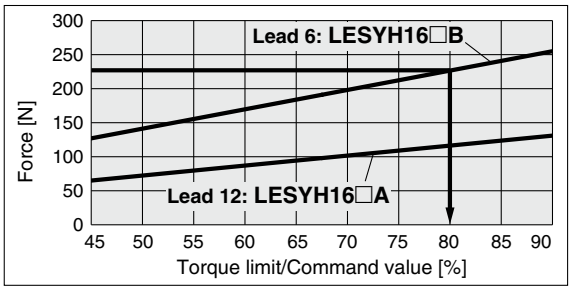

<Force conversion graph>

Step 2 **Check the pushing force.**
<Force conversion graph>

Select a model based on the required force while referencing the force conversion graph, and confirm the torque limit/command value.
Selection example) Based on the graph shown on the right side,
● Required force: 227 [N]
The **LESYH16□B** can be temporarily selected as a possible candidate.
The torque limit/command value is 80 [%].

Allowable Duty Ratio
LESYH16/AC Servo Motor

Pushing force set value [%]	Duty ratio [%]	Continuous pushing time [min]
75 or less	100	—
90	60	1.5

∗ [Pushing force set value] is one of the data input to the driver.
∗ [Continuous pushing time] is the time that the actuator can continuously keep pushing.

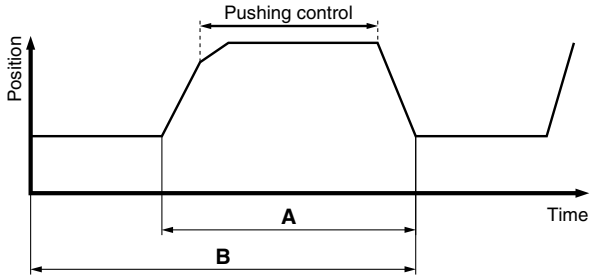

Step 3 **Check the duty ratio.**

Confirm the allowable duty ratio based on the torque limit/command value while referencing the allowable duty ratio.
Selection example based on the allowable duty ratio)
● Torque limit/Command value: 81 [%]
The allowable duty ratio can be found to be 60 [%].
Calculate the duty ratio for the operating conditions, and confirm it does not exceed the allowable duty ratio.
Selection example) ● Pushing time + Operation (A): 5 s
● Full cycle time (B): 10 s
The duty ratio can be found to be 5/10 x 100 = 50 [%], and this is within the allowable range.

Step 4 **Check the allowable moment.**
<Static allowable moment> (page 587)
<Dynamic allowable moment> (pages 589, 590)

Confirm the moment that applies to the actuator is within the allowable range for both static and dynamic conditions.

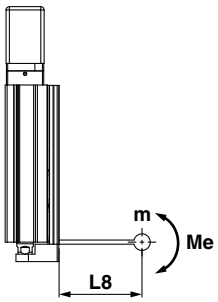

LESYH16/Pitching

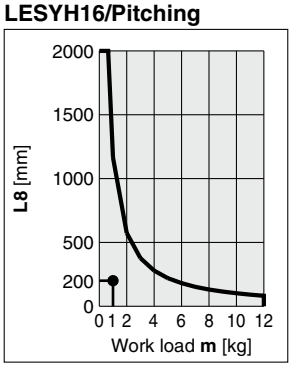

<Dynamic allowable moment>

Based on the above calculation result, the LESYH16□B-100 should be selected.

Speed–Work Load Graph/Required Conditions for the Regenerative Resistor (Guide)

LESYH16□V6

Horizontal

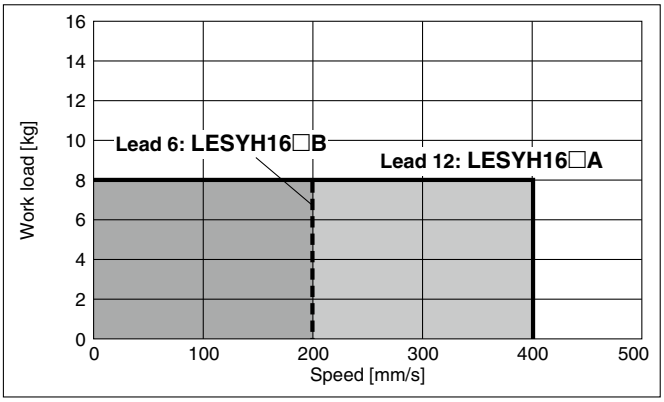

Vertical

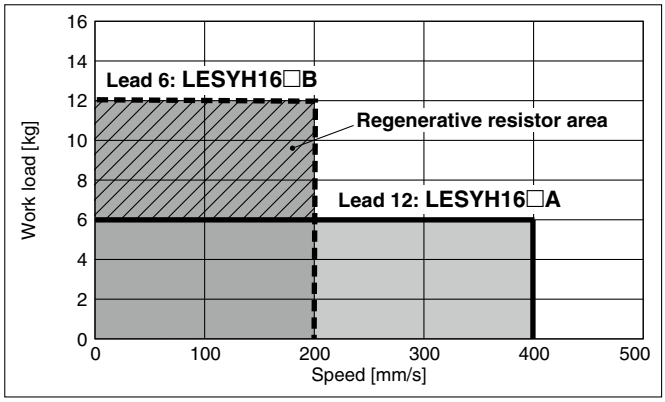

LESYH25□V7

Horizontal

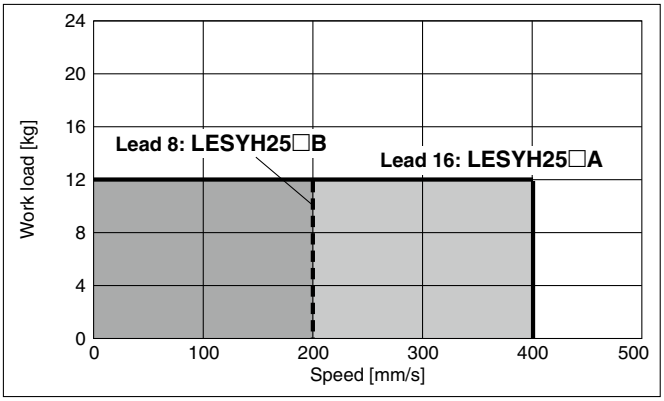

Vertical

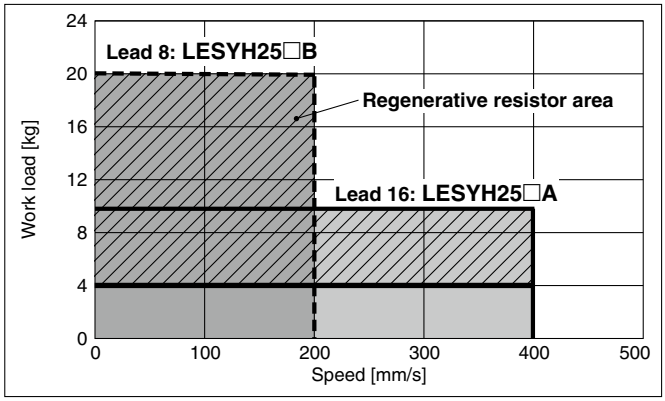

Regenerative resistor area

* When using the actuator in the regenerative resistor area, download the "AC servo drive capacity selection program/SigmaJunmaSize+" from the SMC website. Then, calculate the necessary regenerative resistor capacity to prepare an appropriate external regenerative resistor.
* The regenerative resistor should be provided by the customer.

Applicable Motors/Drivers

Model	Applicable model	
	Motor	Servopack (SMC driver)
LESYH25□	SGMJV-01A3A	SGDV-R90A11□(LECYM2-V5) SGDV-R90A21□(LECYU2-V5)
LESYH32□	SGMJV-02A3A	SGDV-1R6A11□(LECYM2-V7) SGDV-1R6A21□(LECYU2-V7)

Force Conversion Graph (Guide)

LESYH16□V6 (Motor mounting position: Parallel/In-line)

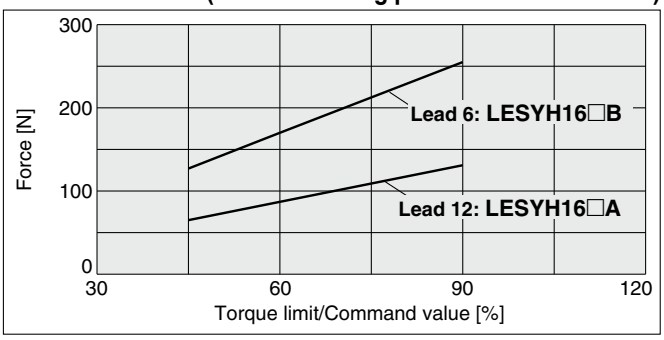

Torque limit/Command value [%]	Duty ratio [%]	Continuous pushing time [min]
75 or less	100	—
90	60	1.5

LESYH25□V7 (Motor mounting position: Parallel)

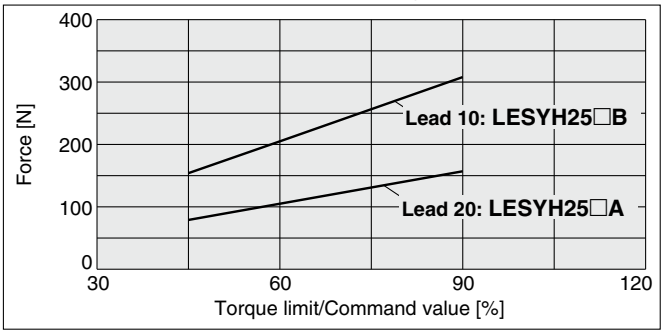

Torque limit/Command value [%]	Duty ratio [%]	Continuous pushing time [min]
75 or less	100	—
90	60	1.5

LESYH25DV7 (Motor mounting position: In-line)

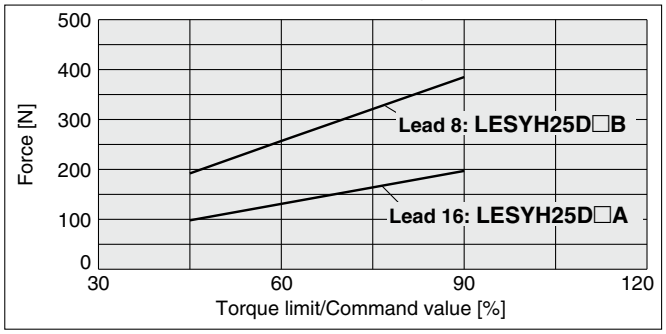

Torque limit/Command value [%]	Duty ratio [%]	Continuous pushing time [min]
75 or less	100	—
90	60	1.5

Table Accuracy

∗ These values are initial guideline values.

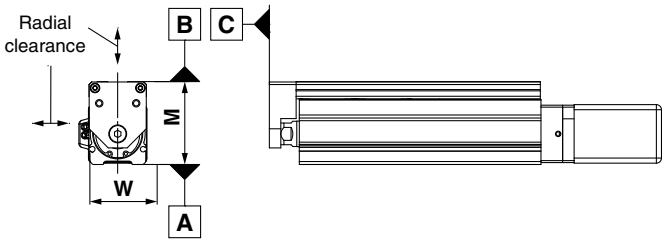

Model	LESYH8	LESYH16	LESYH25
B side parallelism to A side [mm]	Refer to Table 1.		
B side traveling parallelism to A side [mm]	Refer to Graph 1.		
C side perpendicularity to A side [mm]	0.05	0.05	0.05
M dimension tolerance [mm]	±0.3		
W dimension tolerance [mm]	±0.2		
Radial clearance [μm]	−4 to 0	−10 to 0	−14 to 0

Table 1 B side parallelism to A side

Model	Stroke [mm]			
	50	75	100	150
LESYH8	0.055	0.065	—	—
LESYH16	0.05	—	0.08	—
LESYH25	0.06	—	0.08	0.125

Graph 1 B side traveling parallelism to A side

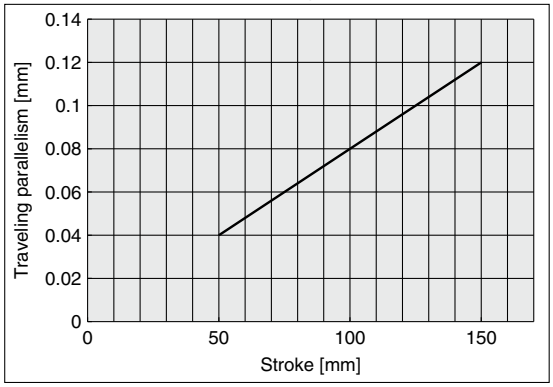

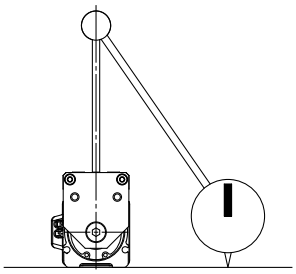

Traveling parallelism:
The amount of deflection on a dial gauge when the table travels a full stroke with the body secured on a reference base surface

Table Deflection (Reference Value)

＊ These values are initial guideline values.

Table displacement due to pitch moment load
Table displacement when loads are applied to the section marked with the arrow with the slide table stuck out.

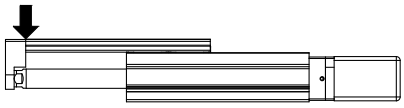

Table displacement due to yaw moment load
Table displacement when loads are applied to the section marked with the arrow with the slide table stuck out.

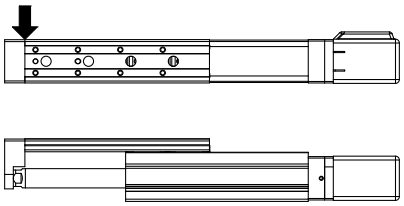

Table displacement due to roll moment load
Table displacement of section A when loads are applied to the section F with the slide table retracted.

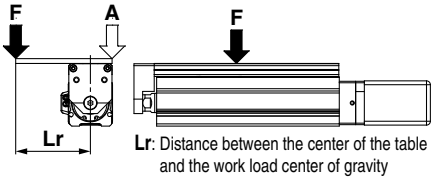

Lr: Distance between the center of the table and the work load center of gravity

LESYH8

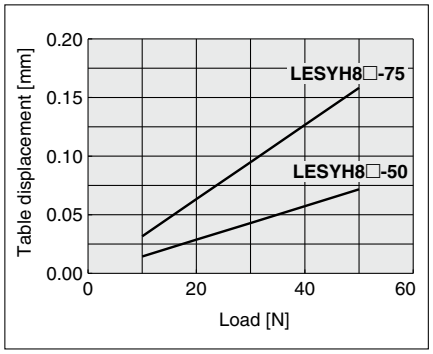

LESYH8

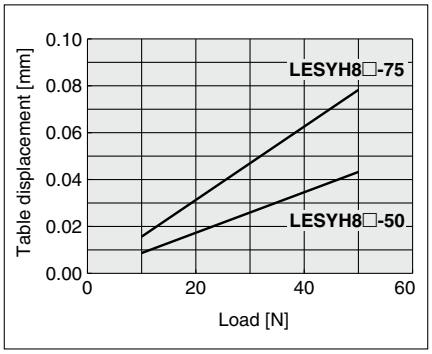

LESYH8

Lr = 70 mm

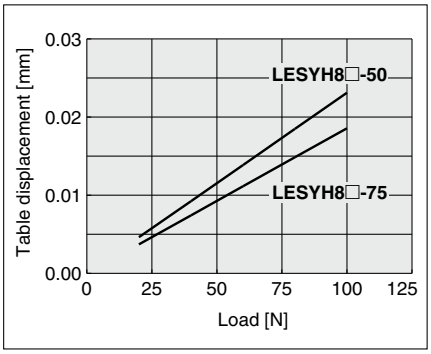

LESYH16

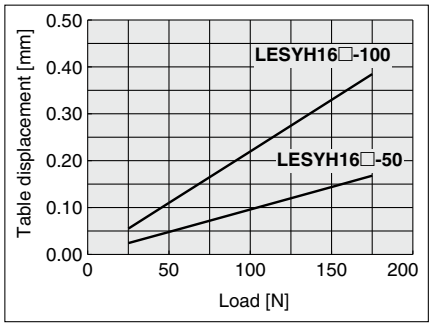

LESYH16

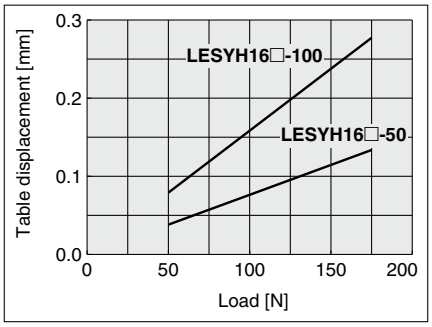

LESYH16

Lr = 120 mm

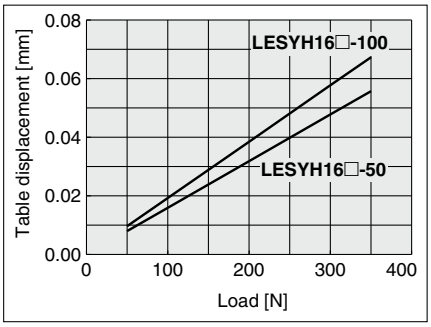

LESYH25

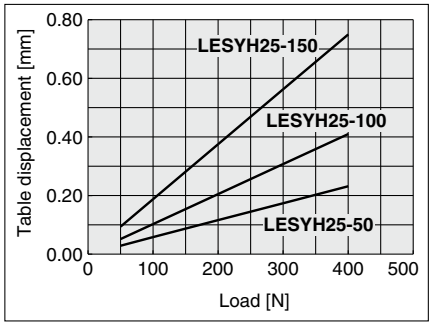

LESYH25

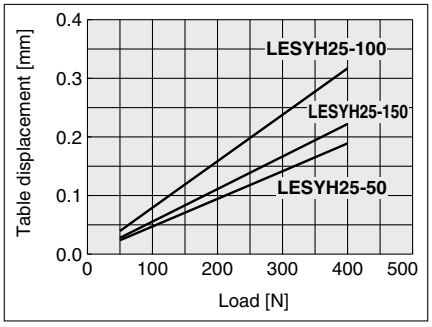

LESYH25

Lr = 200 mm

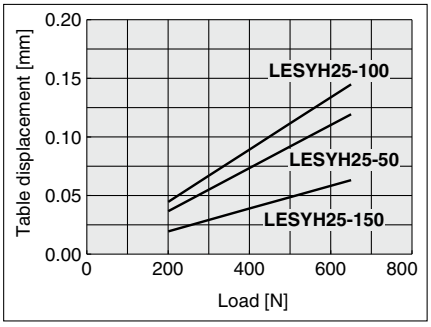

Battery-less Absolute (Step Motor 24 VDC)

Slide Table/High Precision Type

LESYH□E Series

CE UK CA RoHS

* For details, refer to page 1343 and onward.

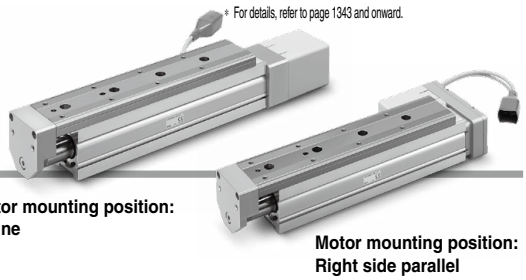

Motor mounting position: In-line

Motor mounting position: Right side parallel

How to Order

LESYH 16 D E A – 50 C – R1 CD17T

❶ ❷ ❸ ❹ ❺ ❻ ❼ ❽

For details on controllers, refer to the next page.

❶ Size

8
16
25

❷ Motor mounting position/Motor cover direction

(For size 8)

Symbol	Motor mounting position	Motor cover direction
D1	In-line	Left side
D2		Right side
D3		Top side
D4		Bottom side
R	Right side parallel	—
L	Left side parallel	—

❷ Motor mounting position

(For sizes 16 and 25)

D	In-line
R	Right side parallel
L	Left side parallel

❸ Motor Type

Symbol	Type	Compatible controllers/drivers		
E	Battery-less absolute (Step motor 24 VDC)	JXC51	JXCP1	JXCEF
		JXC61	JXCD1	JXC9F
		JXCE1	JXCL1	JXCPF
		JXC91	JXCM1	JXCLF

❹ Lead [mm]

	Size		
	8	16	25
A	10	12	16
B	5	6	8
C	2.5	—	—

❺ Stroke [mm]

	Size		
	8	16	25
50	●	●	●
75	●	—	—
100	—	●	●
150	—	—	●

❻ Motor option

C	Without lock
W	With lock

❼ Actuator cable type/length

Robotic cable [m]

Nil	Without cable	R8	8*1
R1	1.5	RA	10*1
R3	3	RB	15*1
R5	5	RC	20*1

For details on auto switches, refer to pages 625 to 628.

❽ Controller

Nil	Without controller
C□1□□	With controller

C D 1 7 T

Interface (Communication protocol/Input/Output)

Symbol	Type	Number of axes, Special specification: Standard	With STO sub-function
5	Parallel input (NPN)	●	
6	Parallel input (PNP)	●	
E	EtherCAT	●	●
9	EtherNet/IP™	●	●
P	PROFINET	●	●
D	DeviceNet®	●	
L	IO-Link	●	●
M	CC-Link	●	

Mounting

7	Screw mounting
8∗2	DIN rail

Number of axes, Special specification

Symbol	Number of axes	Specification
1	Single axis	Standard
F	Single axis	With STO sub-function

Communication plug connector, I/O cable∗3

Symbol	Type	Applicable interface
Nil	Without accessory	—
S	Straight type communication plug connector	DeviceNet® CC-Link Ver. 1.10
T	T-branch type communication plug connector	
1	I/O cable (1.5 m)	Parallel input (NPN) Parallel input (PNP)
3	I/O cable (3 m)	
5	I/O cable (5 m)	

∗1 Produced upon receipt of order
∗2 The DIN rail is not included. It must be ordered separately.
∗3 Select "Nil" for anything other than DeviceNet®, CC-Link, or parallel input.
Select "Nil," "S," or "T" for DeviceNet® or CC-Link.
Select "Nil," "1," "3," or "5" for parallel input.

⚠Caution

[CE/UKCA-compliant products]
EMC compliance was tested by combining the electric actuator LES series and the controller JXC series.
The EMC depends on the configuration of the customer's control panel and the relationship with other electrical equipment and wiring. Therefore, compliance with the EMC directive cannot be certified for SMC components incorporated into the customer's equipment under actual operating conditions. As a result, it is necessary for the customer to verify compliance with the EMC directive for the machinery and equipment as a whole.

[Precautions relating to differences in controller versions]
When the JXC series is to be used in combination with the battery-less absolute encoder, use a controller that is version V3.4 or S3.4 or higher. For details, refer to pages 1077 and 1078.

[UL certification]
The JXC series controllers used in combination with electric actuators are UL certified.

The controller is sold as single unit after the compatible actuator is set.

Confirm that the combination of the controller and actuator is correct.

<Check the following before use.>

① Check the actuator label for the model number. This number should match that of the controller.
② Check that the Parallel input configuration matches (NPN or PNP).

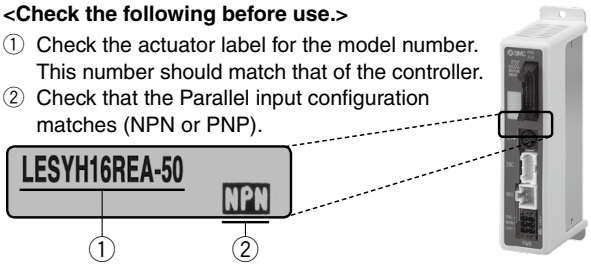

∗ Refer to the Operation Manual for using the products.
Please download it via our website:
https://www.smcworld.com

Type	Step data input type	EtherCAT direct input type	EtherCAT direct input type with STO sub-function	EtherNet/IP™ direct input type	EtherNet/IP™ direct input type with STO sub-function	PROFINET direct input type	PROFINET direct input type with STO sub-function	DeviceNet® direct input type	IO-Link direct input type	IO-Link direct input type with STO sub-function	CC-Link direct input type
Series	**JXC51 JXC61**	**JXCE1**	**JXCEF**	**JXC91**	**JXC9F**	**JXCP1**	**JXCPF**	**JXCD1**	**JXCL1**	**JXCLF**	**JXCM1**
Features	Parallel I/O	EtherCAT direct input	EtherCAT direct input with STO sub-function	EtherNet/IP™ direct input	EtherNet/IP™ direct input with STO sub-function	PROFINET direct input	PROFINET direct input with STO sub-function	DeviceNet® direct input	IO-Link direct input	IO-Link direct input with STO sub-function	CC-Link direct input
Compatible motor	Battery-less absolute (Step motor 24 VDC)										
Max. number of step data	64 points										
Power supply voltage	24 VDC										
Reference page	1017	1063									

Specifications

Step Motor (Servo/24 VDC)

	Model		LESYH8□EA	LESYH8□EB	LESYH8□EC	LESYH16□EA	LESYH16□EB	LESYH25□EA	LESYH25□EB
Actuator specifications	Stroke [mm]		50, 75			50, 100		50, 100, 150	
	Max. work load [kg]*1 *3	Horizontal	2			8		12	
		Vertical	1.5	3	6	6	12	10	20
	Pushing force 35% to 70% [N]*2 *3		18 to 36	37 to 74	69 to 138	91 to 182	174 to 348	109 to 218	210 to 420
	Max. speed [mm/s]*1 *3		400	200	100	400	200	400	200
	Pushing speed [mm/s]		20 to 30	10 to 30	5 to 30	20 to 30	10 to 30	20 to 30	10 to 30
	Max. acceleration/deceleration [mm/s²]		5000						
	Positioning repeatability [mm]		±0.01						
	Lost motion [mm]*4		0.1 or less						
	Screw lead [mm]		10	5	2.5	12	6	16	8
	Impact/Vibration resistance [m/s²]*5		50/20						
	Actuation type		Ball screw: LESYH□D Ball screw + Belt: LESYH□(R, L)						
	Guide type		Linear guide (Circulating type)						
	Operating temperature range [°C]		5 to 40						
	Operating humidity range [%RH]		90 or less (No condensation)						
Electric specifications	Motor size		□28			□42		□56	
	Motor type		Battery-less absolute (Step motor 24 VDC)						
	Encoder (Angular displacement sensor)		Battery-less absolute						
	Power supply voltage [V]		24 VDC ±10%						
	Power [W]*6		Max. power 43			Max. power 48		Max. power 104	
Lock unit specifications	Type	*7	Non-magnetizing lock						
	Holding force [N]	*7	20	39	78	78	157	108	216
	Power [W]*6 *8	*7	2.9			5			
	Rated voltage [V]	*7	24 VDC ±10%						

*1 Speed changes according to the work load. Check the "Speed–Work Load Graph (Guide)" on page 587.
*2 Pushing force accuracy is ±20% (F.S.).
*3 The speed and force may change depending on the cable length, load, and mounting conditions.
Furthermore, if the cable length exceeds 5 m, then it will decrease by up to 10% for each 5 m. (At 15 m: Reduced by up to 20%)
*4 A reference value for correcting errors in reciprocal operation
*5 Vibration resistance: No malfunction occurred in a test ranging between 45 to 2000 Hz. The test was performed in both an axial direction and a perpendicular direction to the lead screw. (The test was performed with the actuator in the initial state.)
Impact resistance: No malfunction occurred when the actuator was tested with a drop tester in both an axial direction and a perpendicular direction to the lead screw. (The test was performed with the actuator in the initial state.)
*6 Indicates the max. power during operation (including the controller). This value can be used for the selection of the power supply.
*7 With lock only
*8 For an actuator with lock, add the power for the lock.

Weight

Product Weight

[kg]

Model	Stroke			
	50	75	100	150
LESYH8□E	1.06	1.23	—	—
LESYH16□E	1.87	—	2.26	—
LESYH25□E	3.50	—	4.10	4.90

Additional Weight

[kg]

Size	8	16	25
With lock	0.16	0.32	0.61

Construction

Right side parallel/R type, Left side parallel/L type

∗ The figures show the R type.

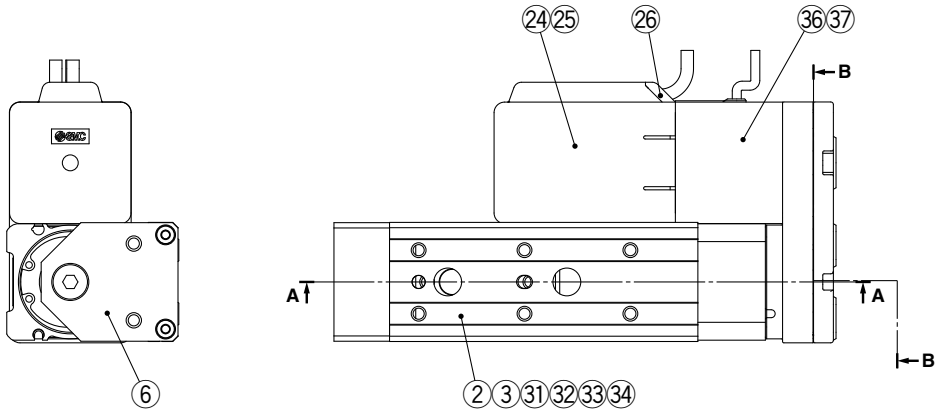

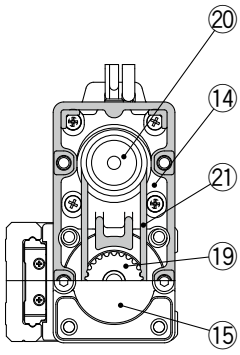

B-B

In-line/D type

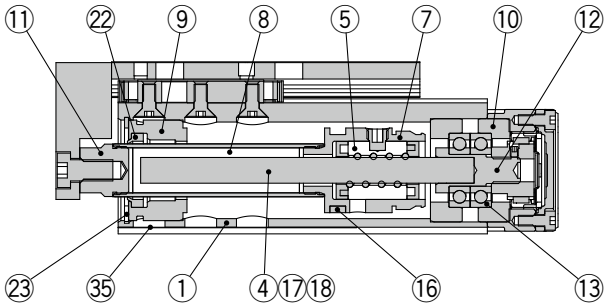

A-A

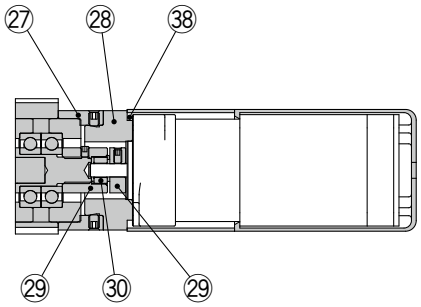

A-A

Component Parts

No.	Description	Material	Note
1	**Body**	Aluminum alloy	Anodized
2	**Table**	Stainless steel	—
3	**Guide block**	Stainless steel	—
4	**Ball screw shaft**	Alloy steel	—
5	**Ball screw nut**	Resin/Alloy steel	—
6	**End plate**	Aluminum alloy	Anodized
7	**Piston**	Aluminum alloy	—
8	**Piston rod**	Stainless steel	Hard chrome plating
9	**Rod cover**	Aluminum alloy	—
10	**Bearing holder**	Aluminum alloy	—
11	**Socket**	Free cutting steel	Electroless nickel plating
12	**Connected shaft**	Free cutting steel	Electroless nickel plating
13	**Bearing**	—	—
14	**Return box**	Aluminum die-cast	Coating
15	**Return plate**	Aluminum die-cast	Coating
16	**Magnet**	—	
17	**Wear ring holder**	Stainless steel	Size 25, 150st only
18	**Wear ring**	Resin	Size 25, 150st only
19	**Screw shaft pulley**	Aluminum alloy	—
20	**Motor pulley**	Aluminum alloy	—
21	**Belt**	—	—
22	**Scraper**	NBR	—
23	**Type C retaining ring for hole**	Steel for spring	Phosphate coating
24	**Motor**	—	—
25	**Motor cover**	Resin	—
		Aluminum alloy	Size 8 only
26	**Grommet**	Resin	—

No.	Description	Material	Note
27	**Motor block**	Aluminum alloy	Anodized
28	**Motor adapter**	Aluminum alloy	Anodized
29	**Hub**	Aluminum alloy	—
30	**Spider**	NBR	—
31	**Cover**	Resin	—
32	**Return guide**	Resin	—
33	**Scraper**	NBR	—
34	**Steel ball**	Special steel	—
35	**Masking tape**	—	—
36	**Lock**	—	With lock only
37	**Motor cover with lock**	Aluminum alloy	With lock only
38	**Cover support**	Aluminum alloy	With lock only

Replacement Parts (Motor mounting position: Parallel type only)/Belt

No.	Size	Order no.
21	**8**	LE-D-2-1
	16	LE-D-2-2
	25	LE-D-2-3

Replacement Parts/Grease Pack

Applied portion	Order no.
Piston rod Guide unit	GR-S-010 (10 g) GR-S-020 (20 g)

Dimensions

LESYH8D□E□-□

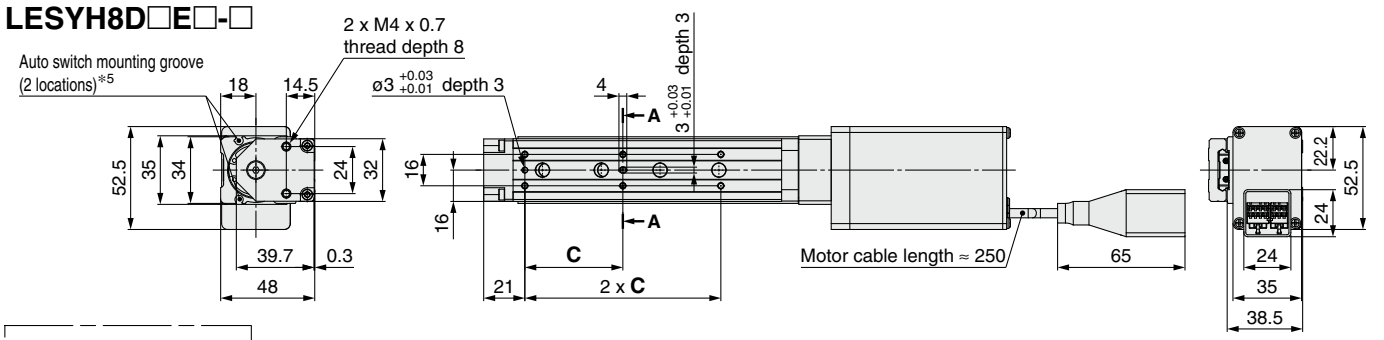

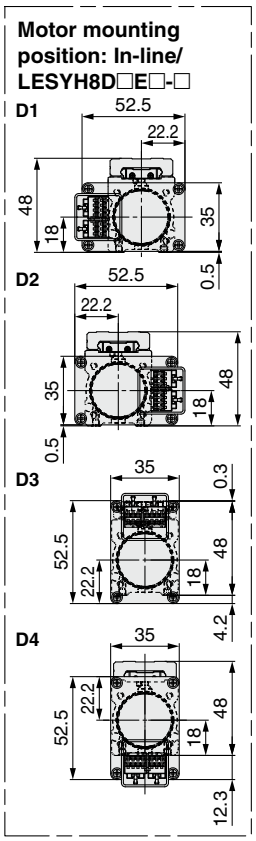

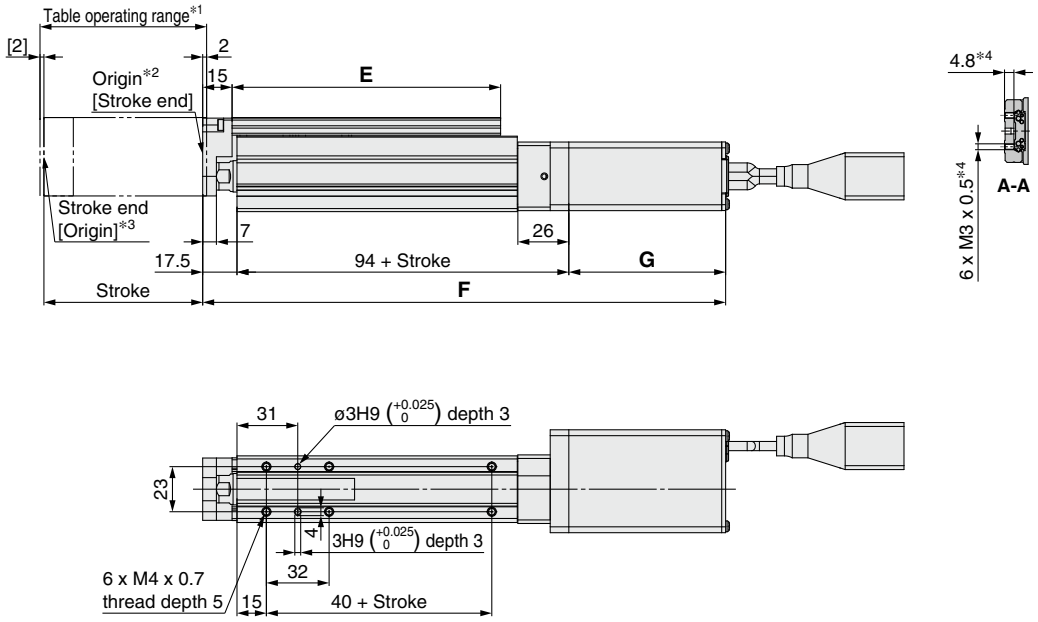

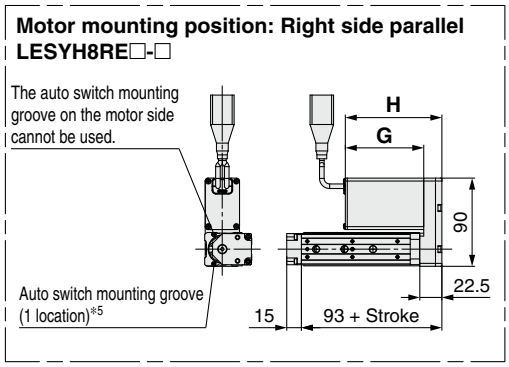

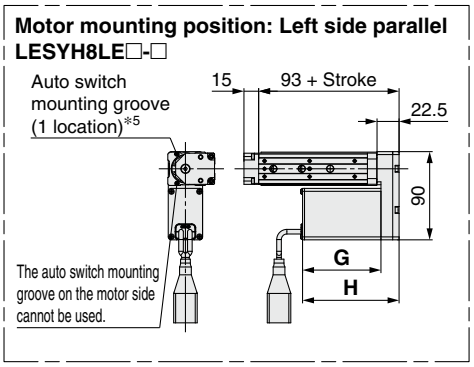

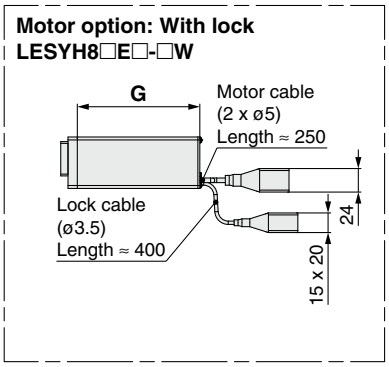

*1 This is the range within which the table can move when it returns to origin.
Make sure that workpieces mounted on the table do not interfere with other workpieces or the facilities around the table.
*2 Position after returning to origin
*3 [ ] for when the direction of return to origin has changed
*4 If the workpiece retaining screws are too long, they may come in contact with the guide block, resulting in a malfunction.
Use screws of a length equal to or shorter than the thread length.
*5 For checking the limit and the intermediate signal. Applicable to the D-M9□, D-M9□E, and D-M9□W (2-color indicator)
The auto switches should be ordered separately. Refer to pages 626 to 628 for details.

Dimensions

[mm]

Model	Stroke	C	E	Without lock			With lock		
				F	G	H	F	G	H
LESYH8□E□	50	46	111	241.5	80	98.5	286.5	125	143.5
	75	50	137	266.5			311.5		

Dimensions

LESYH16DE□-□

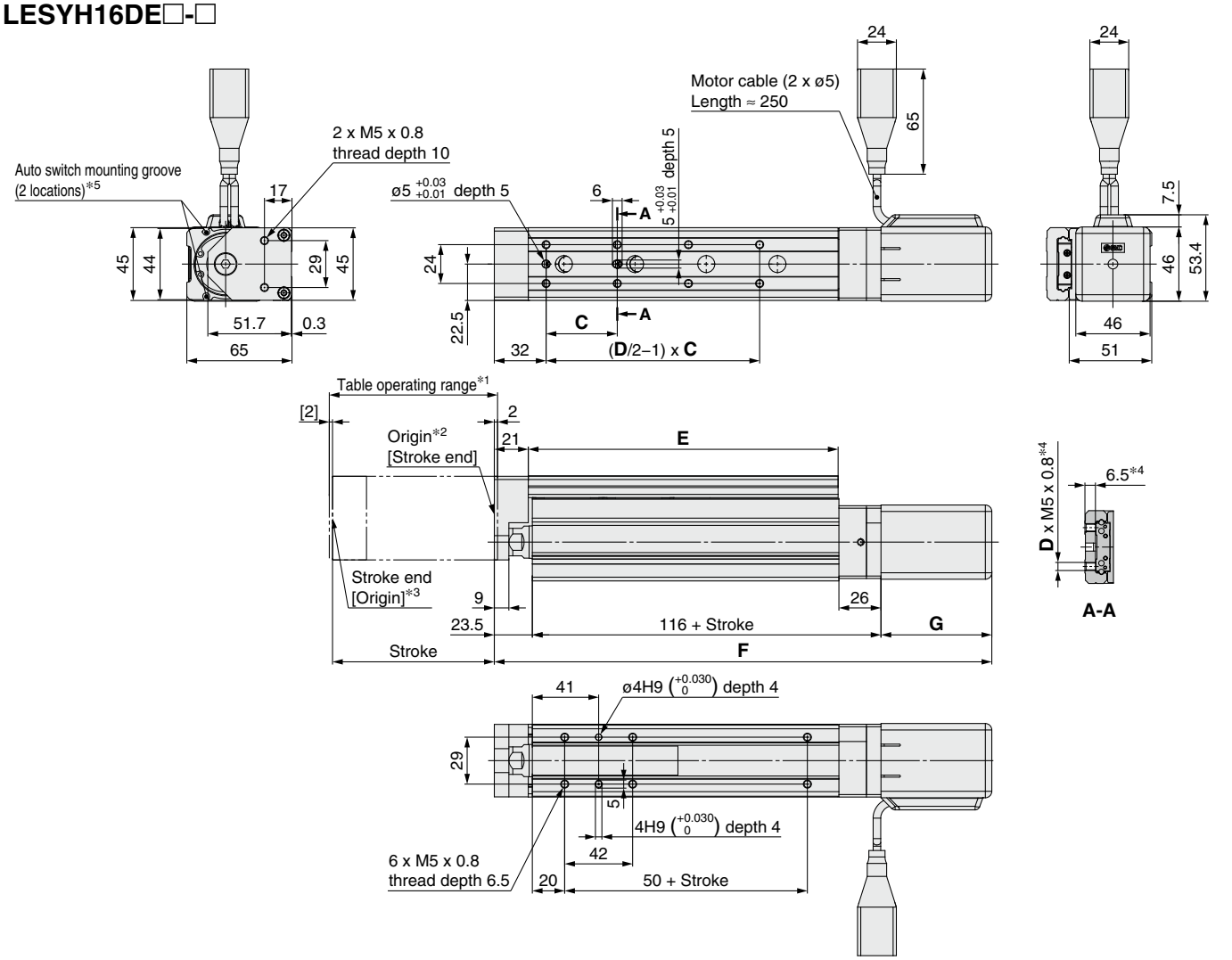

Motor mounting position: Right side parallel
LESYH16RE□-□

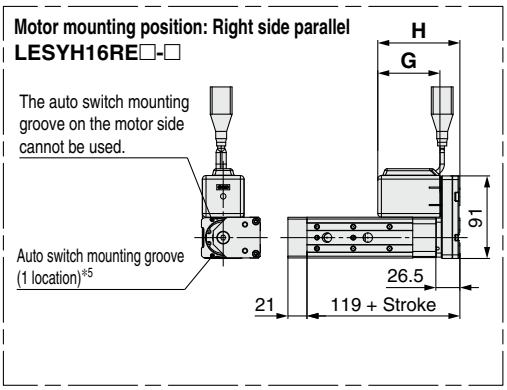

Motor mounting position: Left side parallel
LESYH16LE□-□

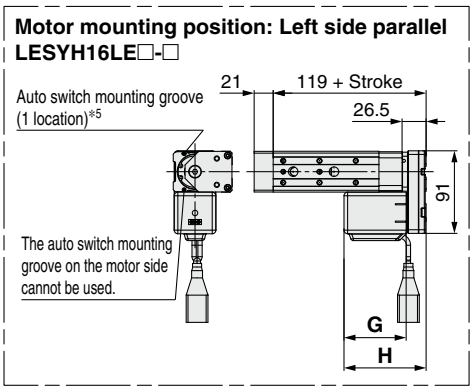

Motor option: With lock
LESYH16□E□-□W

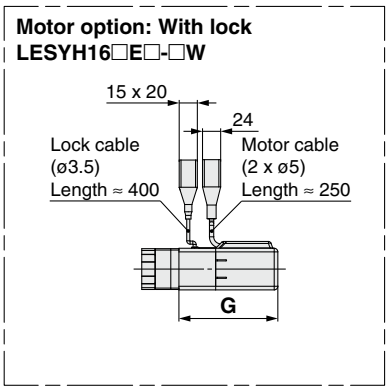

*1 This is the range within which the table can move when it returns to origin.
Make sure that workpieces mounted on the table do not interfere with other workpieces or the facilities around the table.
*2 Position after returning to origin
*3 [ ] for when the direction of return to origin has changed
*4 If the workpiece retaining screws are too long, they may come in contact with the guide block, resulting in a malfunction.
Use screws of a length equal to or shorter than the thread length.
*5 For checking the limit and the intermediate signal. Applicable to the D-M9□, D-M9□E, and D-M9□W (2-color indicator)
The auto switches should be ordered separately. Refer to pages 626 to 628 for details.

Dimensions

[mm]

Model	Stroke	C	D	E	Without lock			With lock		
					F	G	H	F	G	H
LESYH16□E□	50	40	6	116.5	258	68.5	88.5	298.5	109	129
	100	44	8	191.5	308			348.5		

Dimensions

LESYH25DE□-□

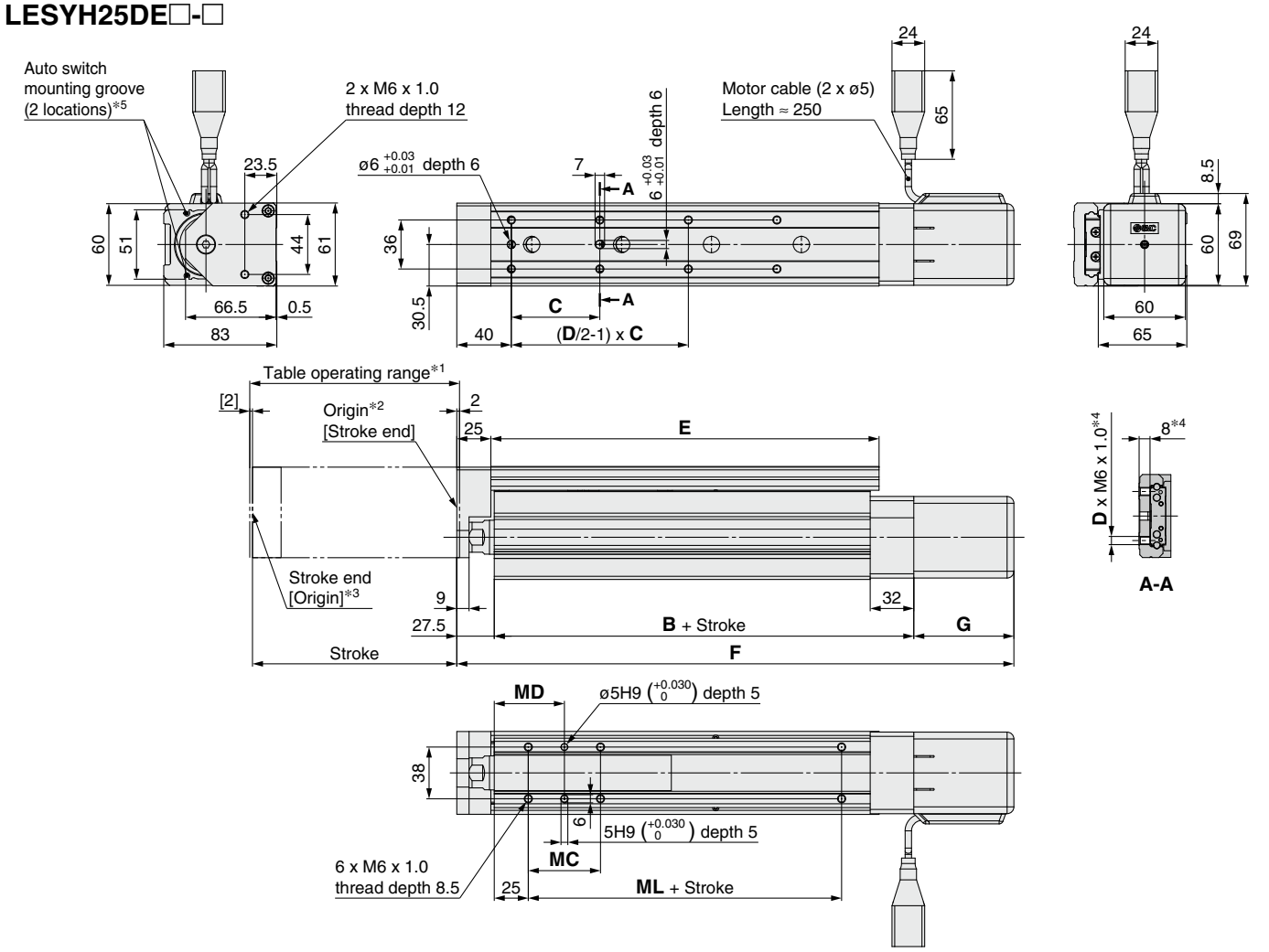

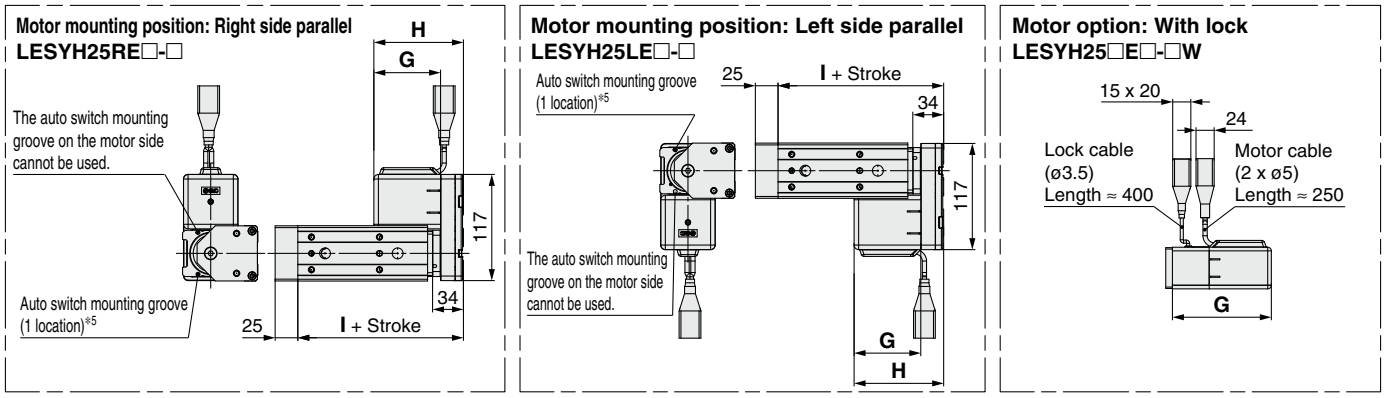

*1 This is the range within which the table can move when it returns to origin.
Make sure that workpieces mounted on the table do not interfere with other workpieces or the facilities around the table.
*2 Position after returning to origin
*3 [ ] for when the direction of return to origin has changed
*4 If the workpiece retaining screws are too long, they may come in contact with the guide block, resulting in a malfunction.
Use screws of a length equal to or shorter than the thread length.
*5 For checking the limit and the intermediate signal. Applicable to the D-M9□, D-M9□E, and D-M9□W (2-color indicator)
The auto switches should be ordered separately. Refer to pages 626 to 628 for details.

Dimensions

[mm]

Model	Stroke	B	C	D	E	Without lock			With lock			I	MC	MD	ML
						F	G	H	F	G	H				
LESYH25□E□	50	128.5	75	4	143	279.5	73.5	98.5	322.5	116.5	141.5	133	36	43	50
	100		48	8	207	329.5			372.5						
	150	158.5	65		285	409.5			452.5			163	53	51.5	80

Slide Table/High Precision Type

LESYH Series

CE UKCA RoHS

∗ For details, refer to page 1343 and onward.

How to Order

LESYH 16 D S2 A - 50 □ - S 2 A1 □

❶ ❷ ❸ ❹ ❺ ❻ ❼ ❽ ❾ ❿

❶ Size

16
25

❷ Motor mounting position

D	In-line
R	Right side parallel
L	Left side parallel

❸ Motor type

Symbol	Type	Output [W]	❷ Size	❾ Driver type	Compatible drivers∗3
S2∗1	AC servo motor (Incremental encoder)	100	16	A1/A2	LECSA□-S1
S3		200	25	A1/A2	LECSA□-S3
T6∗2	AC servo motor (Absolute encoder)	100	16	B2	LECSB2-T5
				C2	LECSC2-T5
				S2	LECSS2-T5
T7		200	25	B2	LECSB2-T7
				C2	LECSC2-T7
				S2	LECSS2-T7

∗1 For motor type S2, the compatible driver part number suffix is S1.
∗2 For motor type T6, the compatible driver part number is LECS□2-T5.
∗3 For details on the driver, refer to page 1100.

❹ Lead [mm]

	Size	
	16	25∗4
A	12	16 (20)
B	6	8 (10)

∗4 The values shown in ( ) are the leads for the right/left side parallel types. (Equivalent leads which include the pulley ratio [1.25:1])

❺ Stroke [mm]

	Size	
	16	25
50	●	●
100	●	●
150	—	●

❻ Motor option

Nil	Without lock
B	With lock

❼ Cable type∗5 ∗6

Nil	Without cable
S	Standard cable
R	Robotic cable (Flexible cable)

∗5 A motor cable and encoder cable are included with the product. (A lock cable is also included if motor option "B: With lock" is selected.)
∗6 Standard cable entry direction is
· Parallel: (A) Axis side
· In-line: (B) Counter axis side
(Refer to page 1123 for details.)

❽ Cable length [m]

Nil	Without cable
2	2
5	5
A	10

For details on auto switches, refer to pages 625 to 628.

Motor mounting position: Parallel

Motor mounting position: In-line

❾ Driver type*7

Symbol	Compatible drivers	Power supply voltage [V]
Nil	Without driver	—
A1	LECSA1-S□	100 to 120
A2	LECSA2-S□	200 to 230
B2	LECSB2-T□	200 to 240
C2	LECSC2-T□	200 to 230
S2	LECSS2-T□	200 to 240

*7 When a driver type is selected, a cable is included.
Select the cable type and cable length.
Example)
S2S2: Standard cable (2 m) + Driver (LECSS2)
S2: Standard cable (2 m)
Nil: Without cable and driver

❿ I/O cable length [m]

Nil	Without cable
H	Without cable (Connector only)
1	1.5

Compatible Drivers

Driver type	Pulse input type/ Positioning type	Pulse input type	CC-Link direct input type	SSCNETⅢ/H type
Series	**LECSA**	**LECSB-T**	**LECSC-T**	**LECSS-T**
Number of point tables	Up to 7	Up to 255	Up to 255 (2 stations occupied)	—
Pulse input	○	○	—	—
Applicable network	—	—	CC-Link	SSCNETⅢ/H
Control encoder	Incremental 17-bit encoder	Absolute 22-bit encoder	Absolute 18-bit encoder	Absolute 22-bit encoder
Communication function	USB communication	USB communication, RS422 communication		USB communication
Power supply voltage [V]	100 to 120 VAC (50/60 Hz) 200 to 230 VAC (50/60 Hz)	200 to 240 VAC (50/60 Hz)	200 to 230 VAC (50/60 Hz)	200 to 240 VAC (50/60 Hz)
Reference page	1109			

Specifications: LECSA

∗ Refer to the next page for the LECSS-T.

	Model		LESYH16□S2		LESYH25□S3 (Parallel)		LESYH25DS3 (In-line)	
Actuator specifications	Stroke [mm]		50, 100		50, 100, 150			
	Max. work load [kg]	Horizontal	8		12		12	
		Vertical	6	12	10	20	10	20
	Force [N]∗1 (Set value: 15 to 30%)		65 to 131	127 to 255	79 to 157	154 to 308	98 to 197	192 to 385
	Max. speed [mm/s]		400	200	400	200	400	200
	Pushing speed [mm/s]∗2		35 or less		30 or less			
	Max. acceleration/deceleration [mm/s²]		5000					
	Positioning repeatability [mm]		±0.01					
	Lost motion∗3 [mm]		0.1 or less					
	Lead [mm] (including pulley ratio)		12	6	20	10	16	8
	Impact/Vibration resistance [m/s²]∗4		50/20					
	Actuation type		Ball screw + Belt (Parallel), Ball screw (In-line)		Ball screw + Belt [1.25:1]		Ball screw	
	Guide type		Linear guide (Circulating type)					
	Operating temperature range [°C]		5 to 40					
	Operating humidity range [%RH]		90 or less (No condensation)					
	Regeneration option		May be required depending on speed and work load (Refer to page 593.)					
Electric specifications	Motor output/Size		100 W/□40		200 W/□60			
	Motor type		AC servo motor (100/200 VAC)					
	Encoder		Incremental 17-bit encoder (Resolution: 131072 p/rev)					
	Power [W]∗5		Max. power 445		Max. power 724			
Lock unit specifications	Type∗6		Non-magnetizing lock					
	Holding force [N]		131	255	157	308	197	385
	Power [W] at 20°C		6.3		7.9			
	Rated voltage [V]		24 VDC $^{0}_{-10\%}$					

∗1 The force setting range (set values for the driver) for the force control with the torque control mode. Set it while referencing the "Force Conversion Graph" on page 594.
∗2 The allowable collision speed for collision with the workpiece with the torque control mode
∗3 A reference value for correcting errors in reciprocal operation
∗4 Impact resistance: No malfunction occurred when the actuator was tested with a drop tester in both an axial direction and a perpendicular direction to the lead screw. (The test was performed with the actuator in the initial state.)
Vibration resistance: No malfunction occurred in a test ranging between 45 to 2000 Hz. The test was performed in both an axial direction and a perpendicular direction to the lead screw. (The test was performed with the actuator in the initial state.)
∗5 Indicates the max. power during operation (including the driver)
When selecting the power supply capacity, refer to the power supply capacity in the operation manual of each driver.
∗6 Only when motor option "With lock" is selected

Weight

Product Weight

[kg]

Model	Stroke		
	50	100	150
LESYH16□S2	1.96	2.35	—
LESYH25□S3	3.83	4.43	5.83

Additional Weight

[kg]

Size	16	25
With lock	0.2	0.4

Specifications: LECS□-T

	Model		LESYH16□T6		LESYH25□T7 (Parallel)		LESYH25DT7 (In-line)	
Actuator specifications	Stroke [mm]		50, 100		50, 100, 150			
	Max. work load [kg]	Horizontal	8		12		12	
		Vertical	6	12	10	20	10	20
	Force [N]*1 (Set value: 12 to 24%)		65 to 131	127 to 255	79 to 157	154 to 308	98 to 197	192 to 385
	Max. speed [mm/s]		400	200	400	200	400	200
	Pushing speed [mm/s]*2		35 or less		30 or less			
	Max. acceleration/deceleration [mm/s²]		5000					
	Positioning repeatability [mm]		±0.01					
	Lost motion*3 [mm]		0.1 or less					
	Lead [mm] (including pulley ratio)		12	6	20	10	16	8
	Impact/Vibration resistance [m/s²]*4		50/20					
	Actuation type		Ball screw + Belt (Parallel), Ball screw (In-line)		Ball screw + Belt [1.25:1]		Ball screw	
	Guide type		Linear guide (Circulating type)					
	Operating temperature range [°C]		5 to 40					
	Operating humidity range [%RH]		90 or less (No condensation)					
	Regeneration option		May be required depending on speed and work load (Refer to page 593.)					
Electric specifications	Motor output/Size		100 W/□40		200 W/□60			
	Motor type		AC servo motor (200 VAC)					
	Encoder*7		Absolute 22-bit encoder (Resolution: 4194304 p/rev)(For LECSB-T□, LECSS-T□) Absolute 18-bit encoder (Resolution: 262144 p/rev) (For LECSC-T□)					
	Power [W]*5		Max. power 445		Max. power 724			
Lock unit specifications	Type*6		Non-magnetizing lock					
	Holding force [N]		131	255	157	308	197	385
	Power [W] at 20°C		6.3		7.9			
	Rated voltage [V]		24 VDC $^{0}_{-10\%}$					

*1 The force setting range (set values for the driver) for the force control with the torque control mode. Set it while referencing the "Force Conversion Graph" on page 595.
When the control equivalent to the pushing operation of the JXC series controller is performed, select the LECSS-T or LECSB2-T driver.
The point table no. input method is used for the LECSB2-T.
When selecting the LECSS2-T, combine it with a Simple Motion module (manufactured by Mitsubishi Electric Corporation) which has a pushing operation function.
*2 The allowable collision speed for collision with the workpiece with the torque control mode
*3 A reference value for correcting errors in reciprocal operation
*4 Impact resistance: No malfunction occurred when the actuator was tested with a drop tester in both an axial direction and a perpendicular direction to the lead screw. (The test was performed with the actuator in the initial state.)
Vibration resistance: No malfunction occurred in a test ranging between 45 to 2000 Hz. The test was performed in both an axial direction and a perpendicular direction to the lead screw. (The test was performed with the actuator in the initial state.)
*5 Indicates the max. power during operation (including the driver)
When selecting the power supply capacity, refer to the power supply capacity in the operation manual of each driver.
*6 Only when motor option "With lock" is selected
*7 The resolution will change depending on the driver type.

Weight

Product Weight

[kg]

Model	Stroke		
	50	100	150
LESYH16□T6	2.02	2.41	—
LESYH25□T7	3.77	4.37	5.77

Additional Weight

[kg]

Size	16	25
With lock	0.3	0.4

Construction

Right side parallel/R type, Left side parallel/L type

∗ The figures show the R type.

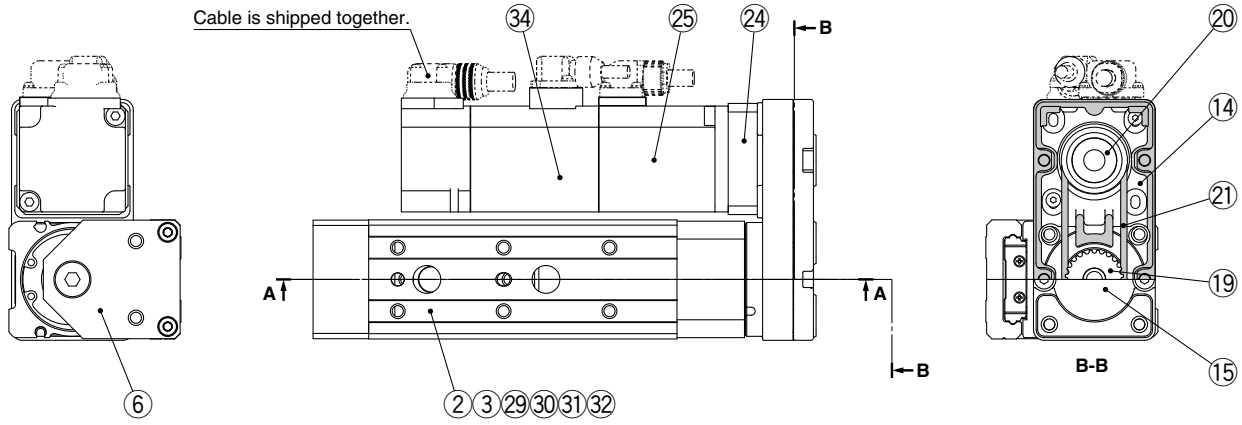

In-line/D type

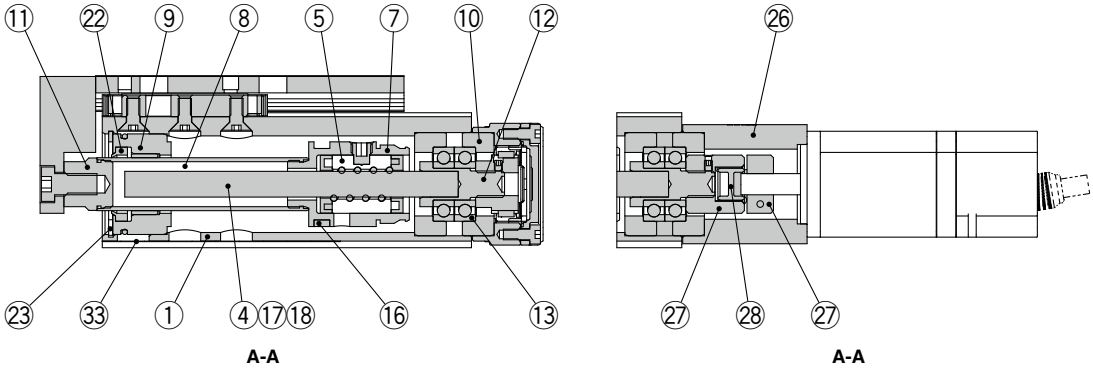

Component Parts

No.	Description	Material	Note
1	**Body**	Aluminum alloy	Anodized
2	**Table**	Stainless steel	—
3	**Guide block**	Stainless steel	—
4	**Ball screw shaft**	Alloy steel	—
5	**Ball screw nut**	Resin/Alloy steel	—
6	**End plate**	Aluminum alloy	Anodized
7	**Piston**	Aluminum alloy	—
8	**Piston rod**	Stainless steel	Hard chrome plating
9	**Rod cover**	Aluminum alloy	—
10	**Bearing holder**	Aluminum alloy	—
11	**Socket**	Free cutting steel	Electroless nickel plating
12	**Connected shaft**	Free cutting steel	Electroless nickel plating
13	**Bearing**	—	—
14	**Return box**	Aluminum die-cast	Coating
15	**Return plate**	Aluminum die-cast	Coating
16	**Magnet**	—	
17	**Wear ring holder**	Stainless steel	Size 25, 150st only
18	**Wear ring**	Resin	Size 25, 150st only
19	**Screw shaft pulley**	Aluminum alloy	—
20	**Motor pulley**	Aluminum alloy	—
21	**Belt**	—	—
22	**Scraper**	NBR	—
23	**Type C retaining ring for hole**	Steel for spring	Phosphate coating
24	**Motor adapter**	Aluminum alloy	Anodized

No.	Description	Material	Note
25	**AC servo motor**	—	—
26	**Motor block**	Aluminum alloy	Anodized
27	**Hub**	Aluminum alloy	—
28	**Spider**	NBR	—
29	**Cover**	Resin	—
30	**Return guide**	Resin	—
31	**Scraper**	NBR	—
32	**Steel ball**	Special steel	—
33	**Masking tape**	—	—
34	**Lock**	—	With lock only

Replacement Parts (Motor mounting position: Parallel type only)/Belt

No.	Size	Order no.
21	**8**	LE-D-2-1
	16	LE-D-2-2
	25	LE-D-2-3

Replacement Parts/Grease Pack

Applied portion	Order no.
Piston rod Guide unit	GR-S-010 (10 g) GR-S-020 (20 g)

Dimensions

LESYH16D$^{S2}_{T6}$□-□

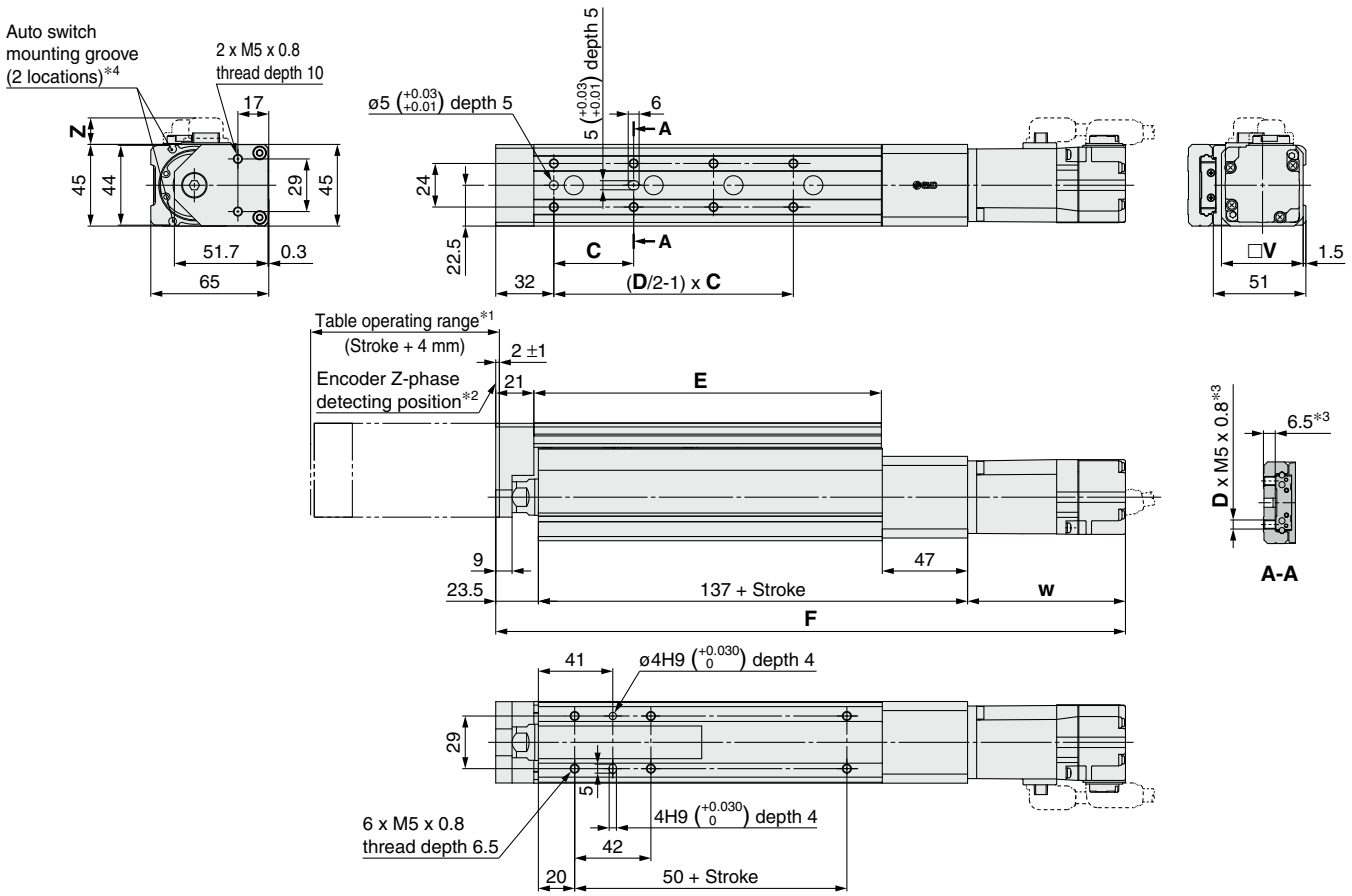

Motor mounting position: Right side parallel
LESYH16R$^{S2}_{T6}$□-□

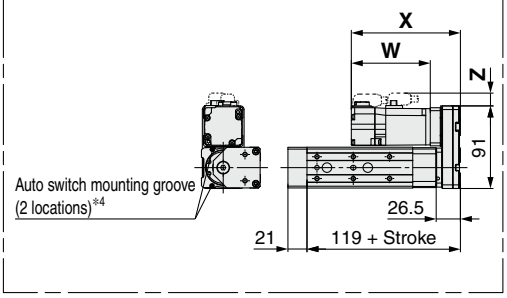

Motor mounting position: Left side parallel
LESYH16L$^{S2}_{T6}$□-□

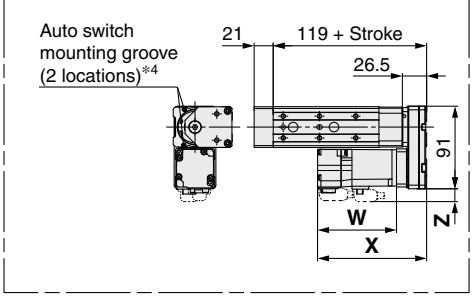

Motor option: With lock
LESYH16□$^{S2}_{T6}$□-□B

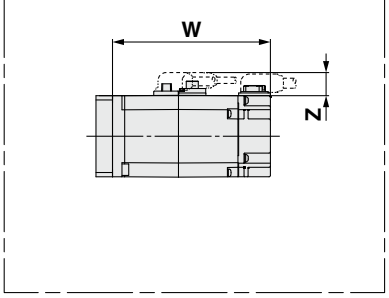

*1 This is the range within which the table can move when it returns to origin.
Make sure that workpieces mounted on the table do not interfere with other workpieces or the facilities around the table.
*2 The Z-phase detecting position from the stroke end
*3 If the workpiece retaining screws are too long, they may come in contact with the guide block, resulting in a malfunction.
Use screws of a length equal to or shorter than the thread length.
*4 For checking the limit and the intermediate signal. Applicable to the D-M9□, D-M9□E, and D-M9□W (2-color indicator)
The auto switches should be ordered separately. Refer to pages 626 to 628 for details.

Dimensions

[mm]

Model	Stroke	C	D	E	Without lock				With lock			
					F	W	X	Z	F	W	X	Z
LESYH16□S2□	50	40	6	116.5	297.5	87	120	14.6	334.4	123.9	156.9	16.3
	100	44	8	191.5	347.5				384.4			
LESYH16□T6□	50	40	6	116.5	292.9	82.4	115.4		334	123.5	156	
	100	44	8	191.5	342.9				384			

Dimensions

LESYH25D$^{S3}_{T7}$□-□

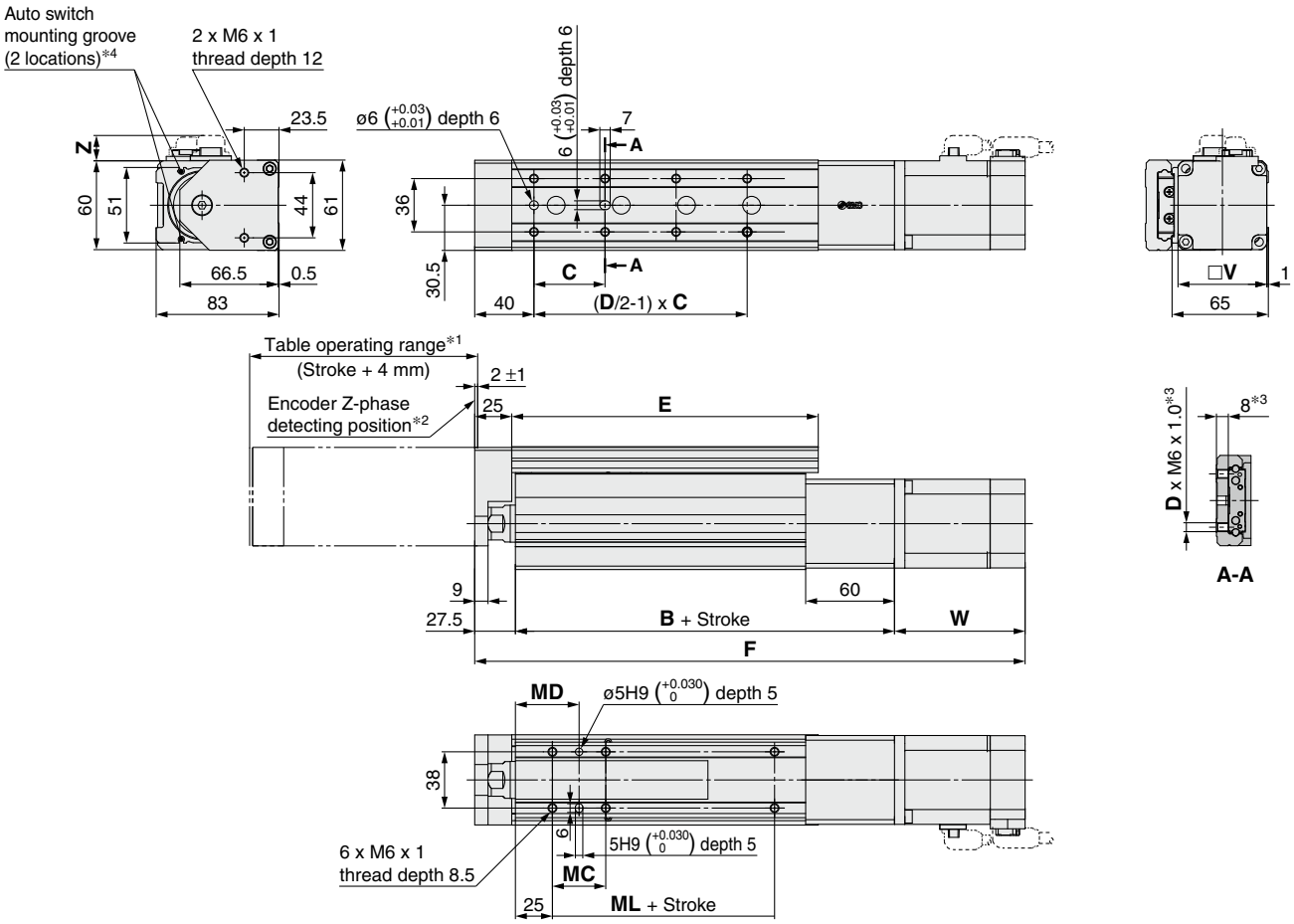

Motor mounting position: Right side parallel
LESYH25R$^{S3}_{T7}$□-□

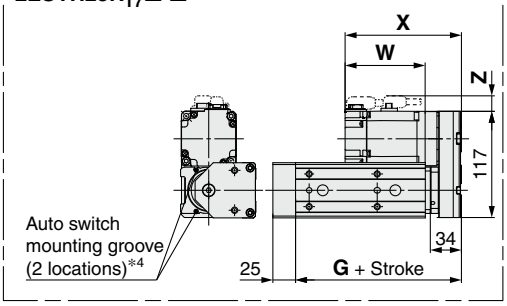

Motor mounting position: Left side parallel
LESYH25L$^{S3}_{T7}$□-□

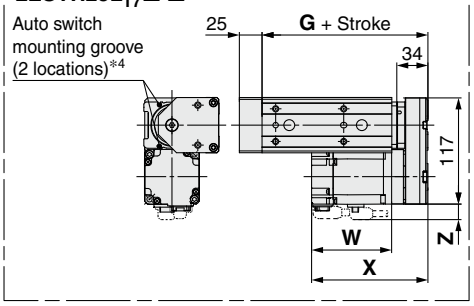

Motor option: With lock
LESYH25□$^{S3}_{T7}$□-□B

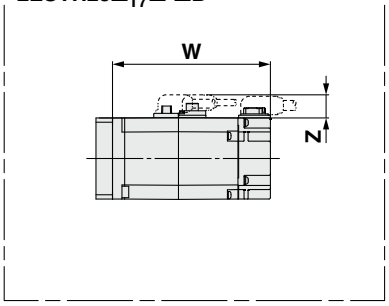

*1 This is the range within which the table can move when it returns to origin.
Make sure that workpieces mounted on the table do not interfere with other workpieces or the facilities around the table.
*2 The Z-phase detecting position from the stroke end
*3 If the workpiece retaining screws are too long, they may come in contact with the guide block, resulting in a malfunction.
Use screws of a length equal to or shorter than the thread length.
*4 For checking the limit and the intermediate signal. Applicable to the D-M9□, D-M9□E, and D-M9□W (2-color indicator)
The auto switches should be ordered separately. Refer to pages 626 to 628 for details.

Dimensions

[mm]

Model	Stroke	B	C	D	E	G	Without lock				With lock				MC	MD	ML
							F	W	X	Z	F	W	X	Z			
LESYH25□S3□	50	156.5	75	4	143	133	322	88.2	128.2	17.1	350.6	116.8	156.8	17.1	36	43	50
	100		48	8	207		372				400.6						
	150	186.5	65		285	163	452				480.6				53	51.5	80
LESYH25□T7□	50	156.5	75	4	143	133	310.4	76.6	116.6		347.2	113.4	153.4		36	43	50
	100		48	8	207		360.4				397.2						
	150	186.5	65		285	163	440.4				477.2				53	51.5	80

Slide Table/High Precision Type

LESYH Series

CE RoHS

∗ For details, refer to page 1343 and onward.

How to Order

LESYH 16 D V6 A – 50 □ – S 3 M2 □

❶ ❷ ❸ ❹ ❺ ❻ ❼ ❽ ❾ ❿

❶ Size

16
25

❷ Motor mounting position

D	In-line
R	Right side parallel
L	Left side parallel

❸ Motor type

Symbol	Type	Output [W]	❶ Size	❾ Driver type	Compatible drivers
V6∗1	AC servo motor (Absolute encoder)	100	16	M2	LECYM2-V5
				U2	LECYU2-V5
V7		200	25	M2	LECYM2-V7
				U2	LECYU2-V7

∗1 For motor type V6, the compatible driver part number suffix is V5.

❹ Lead [mm]

	Size	
	16	25∗2
A	12	16 (20)
B	6	8 (10)

∗2 The values shown in ( ) are the leads for the right/left side parallel types. (Equivalent leads which include the pulley ratio [1.25:1])

❺ Stroke [mm]

	Size	
	16	25
50	●	●
100	●	●
150	—	●

❻ Motor option

Nil	Without option
B	With lock

❼ Cable type∗3

Nil	Without cable
S	Standard cable
R	Robotic cable (Flexible cable)

∗3 A motor cable and encoder cable are included with the product.
A motor cable for lock option is included if motor option "B: With lock" is selected.

❽ Cable length [m]∗4

Nil	Without cable
3	3
5	5
A	10

∗4 The length of the motor and encoder cables are the same. (For with lock)

For details on auto switches, refer to pages 625 to 628.

Motor mounting position: Parallel

Motor mounting position: In-line

❾ Driver type*5

Symbol	Compatible drivers	Power supply voltage [V]
Nil	Without driver	—
M2	LECYM2-V□	200 to 230
U2	LECYU2-V□	200 to 230

*5 When a driver type is selected, a cable is included.
Select the cable type and cable length.

❿ I/O cable length [m]*6

Nil	Without cable
H	Without cable (Connector only)
1	1.5

*6 When "Nil: Without driver" is selected for the driver type, only "Nil: Without cable" can be selected. Refer to page 1135 if an I/O cable is required.
(Options are shown on page 1135.)

Compatible Drivers

Driver type	MECHATROLINK-Ⅲ type	MECHATROLINK-Ⅲ type
Series	**LECYM**	**LECYU**
Applicable network	MECHATROLINK-Ⅱ	MECHATROLINK-Ⅲ
Control encoder	Absolute 20-bit encoder	
Communication device	USB communication, RS-422 communication	
Power supply voltage [V]	200 to 230 VAC (50/60 Hz)	
Reference page	1128	

Specifications

	Model		LESYH16□V6		LESYH25□V7 (Parallel)		LESYH25DV7 (In-line)	
Actuator specifications	Stroke [mm]		50, 100		50, 100, 150			
	Max. work load [kg]	Horizontal	8		12		12	
		Vertical	6	12	10	20	10	20
	Force [N]*1 (Set value: 45 to 90%)		65 to 131	127 to 255	79 to 157	154 to 308	98 to 197	192 to 385
	Max. speed [mm/s]		400	200	400	200	400	200
	Pushing speed [mm/s]*2		35 or less		30 or less			
	Max. acceleration/deceleration [mm/s²]		5000					
	Positioning repeatability [mm]		±0.01					
	Lost motion*3 [mm]		0.1 or less					
	Lead [mm] (including pulley ratio)		12	6	20	10	16	8
	Impact/Vibration resistance [m/s²]*4		50/20					
	Actuation type		Ball screw + Belt (Parallel), Ball screw (In-line)		Ball screw + Belt [1.25:1]		Ball screw	
	Guide type		Linear guide (Circulating type)					
	Operating temperature range [°C]		5 to 40					
	Operating humidity range [%RH]		90 or less (No condensation)					
	Required conditions for the regenerative resistor*5 [kg]	Horizontal	Not required					
		Vertical	6 or more		4 or more			
Electric specifications	Motor output/Size		100 W/□40		200 W/□60			
	Motor type		AC servo motor (200 VAC)					
	Encoder		Absolute 20-bit encoder (Resolution: 1048576 p/rev)					
	Power [W]*6		Max. power 445		Max. power 724			
Lock unit specifications	Type*7		Non-magnetizing lock					
	Holding force [N]		131	255	157	308	197	385
	Power [W] at 20°C		5.5		6			
	Rated voltage [V]		24 VDC $^{+10\%}_{0}$					

*1 The force setting range (set values for the driver) for the force control with the torque control mode. Set it while referencing the "Force Conversion Graph" on page 600.
*2 The allowable collision speed for collision with the workpiece with the torque control mode
*3 A reference value for correcting errors in reciprocal operation
*4 Impact resistance: No malfunction occurred when the actuator was tested with a drop tester in both an axial direction and a perpendicular direction to the lead screw. (The test was performed with the actuator in the initial state.)
Vibration resistance: No malfunction occurred in a test ranging between 45 to 2000 Hz. The test was performed in both an axial direction and a perpendicular direction to the lead screw. (The test was performed with the actuator in the initial state.)
*5 The work load conditions which require the regenerative resistor when operating at the max. speed (Duty ratio: 100%). Order the regenerative resistor separately. For details, refer to the "Required Conditions for the Regenerative Resistor (Guide)" on page 599.
*6 Indicates the max. power during operation (including the driver)
When selecting the power supply capacity, refer to the power supply capacity in the operation manual of each driver.
*7 Only when motor option "With lock" is selected

Weight

Product Weight

[kg]

Model	Stroke		
	50	100	150
LESYH16□V6	1.85	2.24	—
LESYH25□V7	3.68	4.28	5.68

Additional Weight

[kg]

Size	16	25
With lock	0.3	0.6

Construction

Right side parallel/R type, Left side parallel/L type

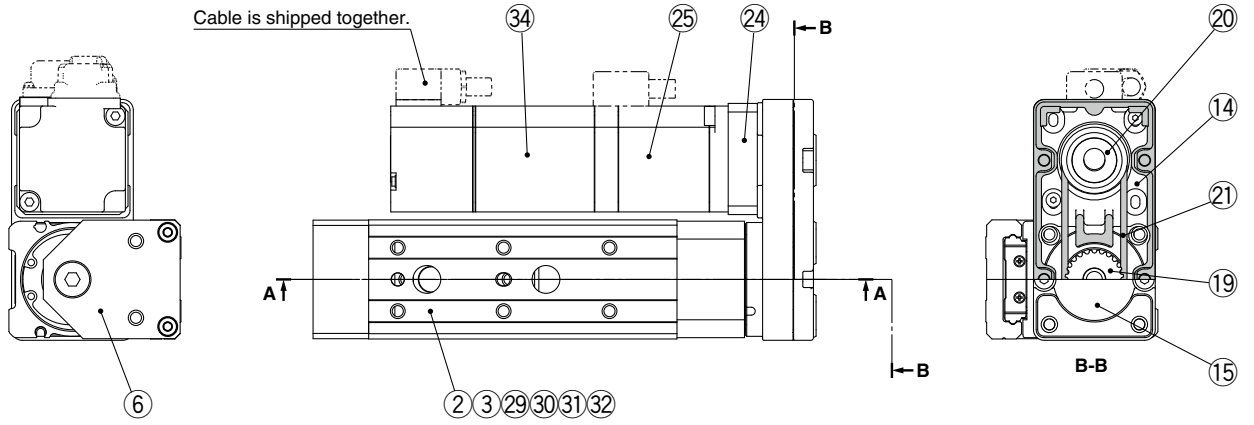

In-line/D type

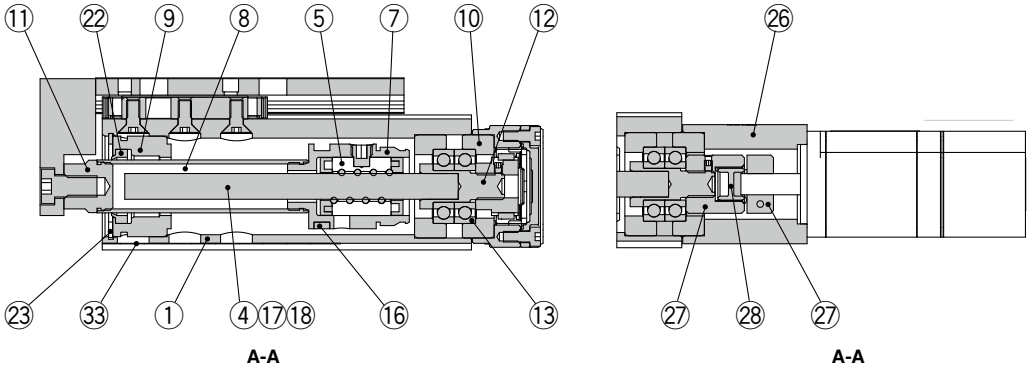

Component Parts

No.	Description	Material	Note
1	**Body**	Aluminum alloy	Anodized
2	**Table**	Stainless steel	—
3	**Guide block**	Stainless steel	—
4	**Ball screw shaft**	Alloy steel	—
5	**Ball screw nut**	Resin/Alloy steel	—
6	**End plate**	Aluminum alloy	Anodized
7	**Piston**	Aluminum alloy	—
8	**Piston rod**	Stainless steel	Hard chrome plating
9	**Rod cover**	Aluminum alloy	—
10	**Bearing holder**	Aluminum alloy	—
11	**Socket**	Free cutting steel	Electroless nickel plating
12	**Connected shaft**	Free cutting steel	Electroless nickel plating
13	**Bearing**	—	—
14	**Return box**	Aluminum die-cast	Coating
15	**Return plate**	Aluminum die-cast	Coating
16	**Magnet**	—	
17	**Wear ring holder**	Stainless steel	Size 25, 150st only
18	**Wear ring**	Resin	Size 25, 150st only
19	**Screw shaft pulley**	Aluminum alloy	—
20	**Motor pulley**	Aluminum alloy	—
21	**Belt**	—	—
22	**Scraper**	NBR	—
23	**Type C retaining ring for hole**	Steel for spring	Phosphate coating
24	**Motor adapter**	Aluminum alloy	Anodized

No.	Description	Material	Note
25	**AC servo motor**	—	—
26	**Motor block**	Aluminum alloy	Anodized
27	**Hub**	Aluminum alloy	—
28	**Spider**	NBR	—
29	**Cover**	Resin	—
30	**Return guide**	Resin	—
31	**Scraper**	NBR	—
32	**Steel ball**	Special steel	—
33	**Masking tape**	—	—
34	**Lock**	—	With lock only

Replacement Parts (Motor mounting position: Parallel type only)/Belt

No.	Size	Order no.
21	**8**	LE-D-2-1
	16	LE-D-2-2
	25	LE-D-2-3

Replacement Parts/Grease Pack

Applied portion	Order no.
Piston rod Guide unit	GR-S-010 (10 g) GR-S-020 (20 g)

Dimensions

LESYH16DV6□-□

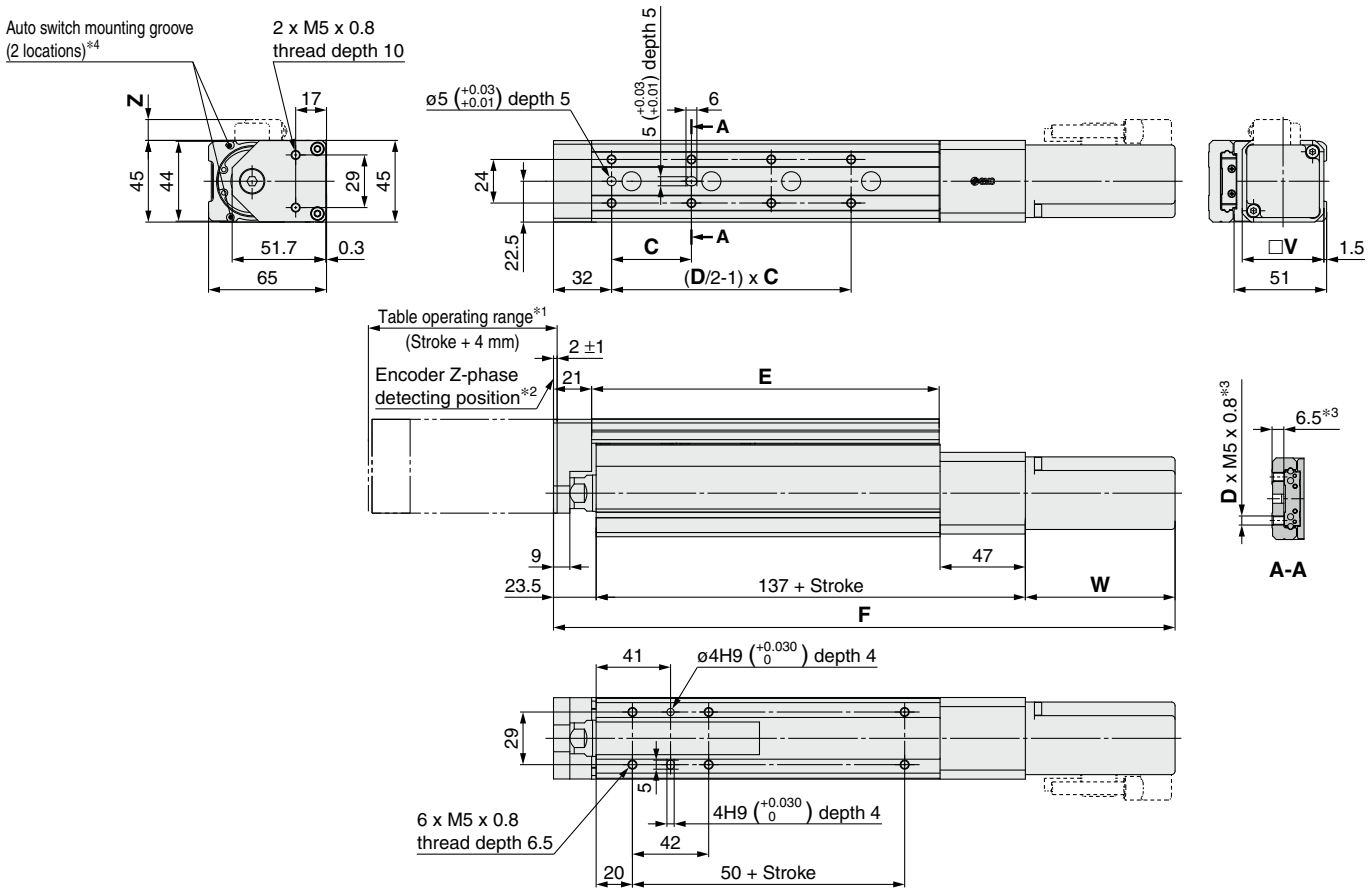

Motor mounting position: Right side parallel
LESYH16RV6□-□

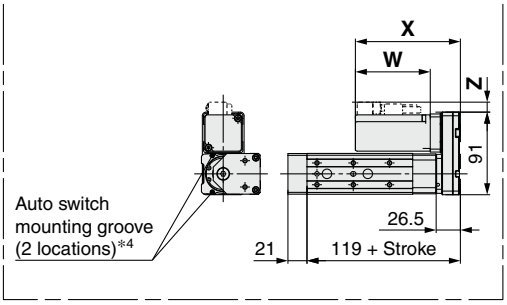

Motor mounting position: Left side parallel
LESYH16LV6□-□

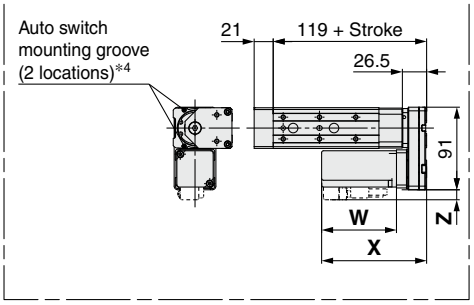

Motor option: With lock
LESYH16□V6□-□B

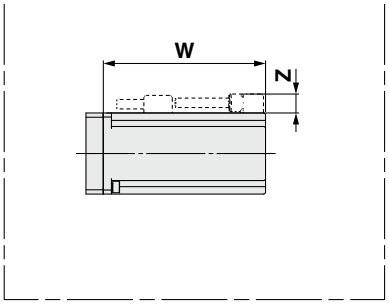

∗1 This is the range within which the table can move when it returns to origin.
Make sure that workpieces mounted on the table do not interfere with other workpieces or the facilities around the table.
∗2 The Z-phase detecting position from the stroke end
∗3 If the workpiece retaining screws are too long, they may come in contact with the guide block, resulting in a malfunction.
Use screws of a length equal to or shorter than the thread length.
∗4 For checking the limit and the intermediate signal. Applicable to the D-M9□, D-M9□E, and D-M9□W (2-color indicator)
The auto switches should be ordered separately. Refer to pages 626 to 628 for details.

Dimensions

[mm]

Model	Stroke	C	D	E	Without lock				With lock			
					F	W	X	Z	F	W	X	Z
LESYH16□V6□	50	40	6	116.5	293	82.5	115.5	11.5	338	127.5	160.5	11.5
	100	44	8	191.5	343				388			

Dimensions

LESYH25DV7□-□

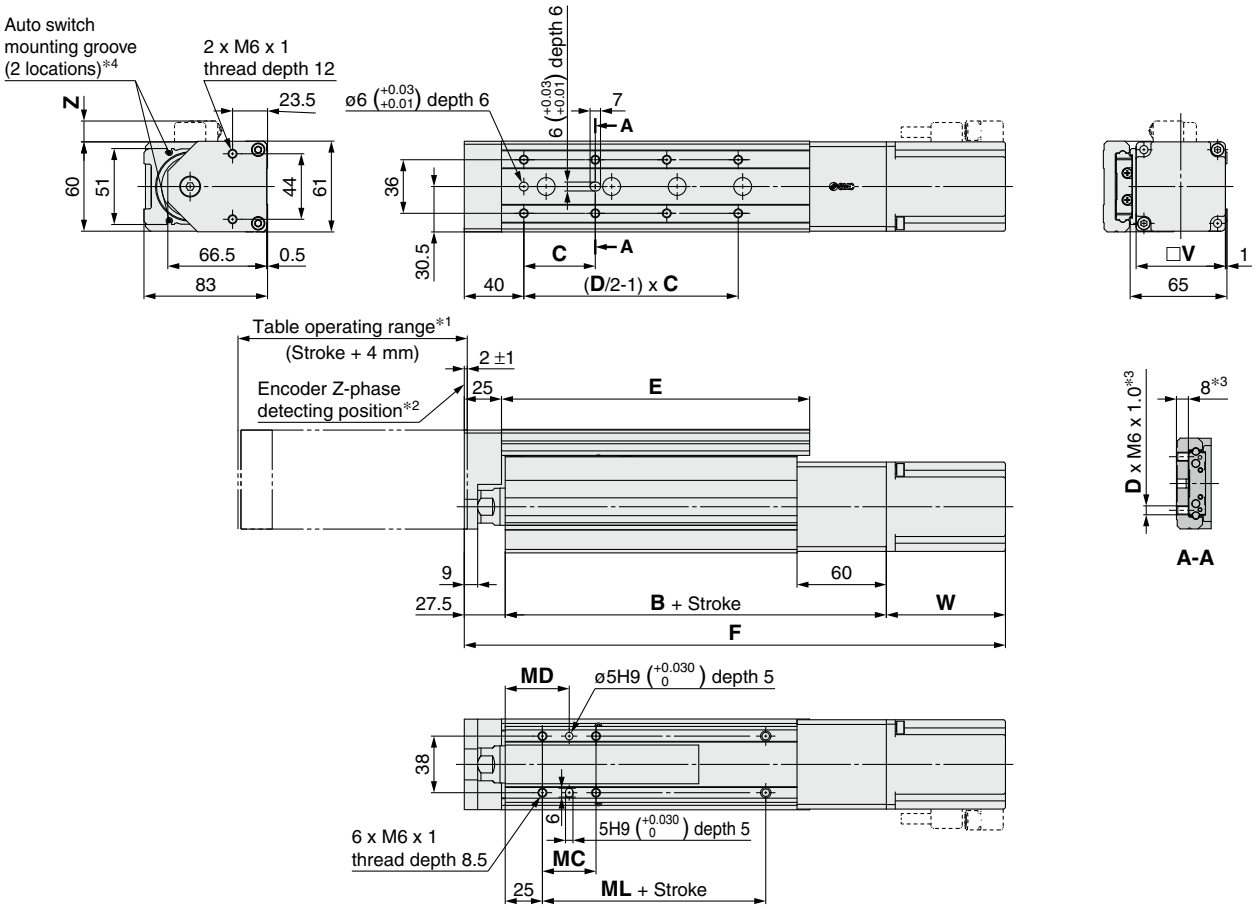

Motor mounting position: Right side parallel
LESYH25RV7□-□

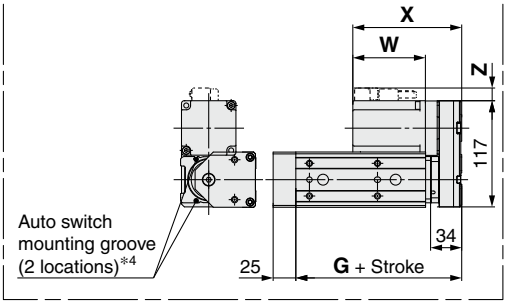

Motor mounting position: Left side parallel
LESYH25LV7□-□

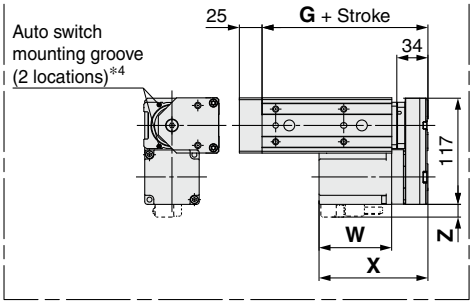

Motor option: With lock
LESYH25□V7□-□B

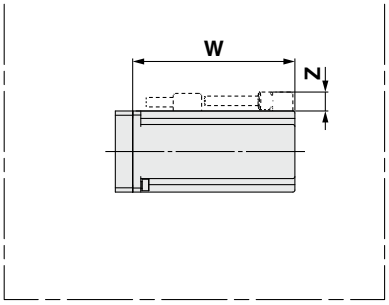

*1 This is the range within which the table can move when it returns to origin.
Make sure that workpieces mounted on the table do not interfere with other workpieces or the facilities around the table.
*2 The Z-phase detecting position from the stroke end
*3 If the workpiece retaining screws are too long, they may come in contact with the guide block, resulting in a malfunction.
Use screws of a length equal to or shorter than the thread length.
*4 For checking the limit and the intermediate signal. Applicable to the D-M9□, D-M9□E, and D-M9□W (2-color indicator)
The auto switches should be ordered separately. Refer to pages 626 to 628 for details.

Dimensions

[mm]

Model	Stroke	B	C	D	E	G	Without lock				With lock				MC	MD	ML
							F	W	X	Z	F	W	X	Z			
LESYH25□V7□	50	156.5	75	4	143	133	313.8	80	120	14	353.8	120	160	14	36	43	50
	100		48	8	207		363.8				403.8						
	150	186.5	65		285	163	443.8				483.8				53	51.5	80

Auto Switch Mounting

Auto Switch Mounting Position

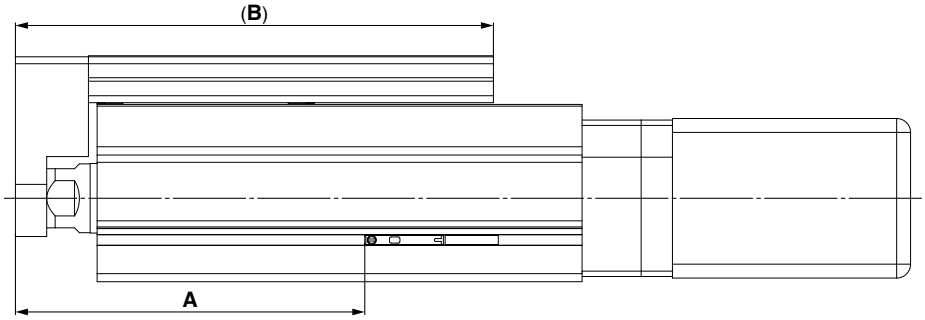

[mm]

Size	Stroke	A	B
8	50	89	126
	75	114	152
16	50	100.5	137.5
	100	150.5	212.5
25	50	108	168
	100	158	232
	150	238	310

Auto Switch Mounting

When mounting the auto switches, they should be inserted into the actuator's auto switch mounting groove as shown in the drawing below.

After setting in the mounting position, use a flat head watchmaker's screwdriver to tighten the auto switch mounting screw that is included.

Auto Switch Mounting Screw Tightening Torque [N·m]

Auto switch model	Tightening torque
D-M9□(V) **D-M9□W(V)** **D-M9□E**	0.05 to 0.15

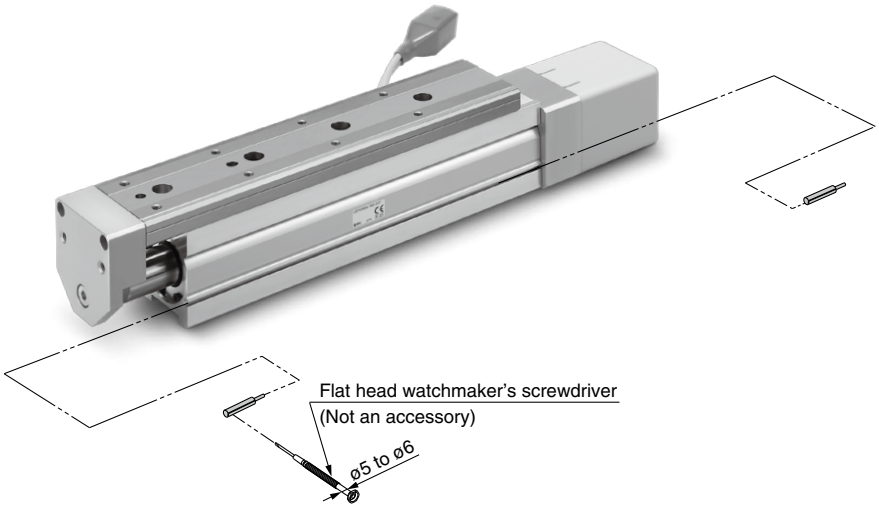

∗ When tightening the auto switch mounting screw (included with auto switch), use a watchmaker's screwdriver with a handle diameter of about 5 to 6 mm.

Solid State Auto Switch Direct Mounting Type
D-M9N(V)/D-M9P(V)/D-M9B(V)

Refer to the SMC website for details on products that are compliant with international standards.

Grommet

- **2-wire load current is reduced (2.5 to 40 mA).**
- **Using flexible cable as standard spec.**

⚠Caution

Precautions

Fix the auto switch with the existing screw installed on the auto switch body. The auto switch may be damaged if a screw other than the one supplied is used.

Auto Switch Specifications

PLC: Programmable Logic Controller

D-M9□, D-M9□V (With indicator light)						
Auto switch model	D-M9N	D-M9NV	D-M9P	D-M9PV	D-M9B	D-M9BV
Electrical entry direction	In-line	Perpendicular	In-line	Perpendicular	In-line	Perpendicular
Wiring type	3-wire				2-wire	
Output type	NPN		PNP		—	
Applicable load	IC circuit, Relay, PLC				24 VDC relay, PLC	
Power supply voltage	5, 12, 24 VDC (4.5 to 28 V)				—	
Current consumption	10 mA or less				—	
Load voltage	28 VDC or less		—		24 VDC (10 to 28 VDC)	
Load current	40 mA or less				2.5 to 40 mA	
Internal voltage drop	0.8 V or less at 10 mA (2 V or less at 40 mA)				4 V or less	
Leakage current	100 μA or less at 24 VDC				0.8 mA or less	
Indicator light	Red LED illuminates when turned ON.					
Standard	CE/UKCA marking					

Oilproof Flexible Heavy-duty Lead Wire Specifications

Auto switch model		D-M9N(V)	D-M9P(V)	D-M9B(V)
Sheath	Outside diameter [mm]	ø2.6		
Insulator	Number of cores	3 cores (Brown/Blue/Black)		2 cores (Brown/Blue)
	Outside diameter [mm]	ø0.88		
Conductor	Effective area [mm²]	0.15		
	Strand diameter [mm]	ø0.05		
Min. bending radius [mm] (Reference values)		17		

∗ Refer to page 1363 for solid state auto switch common specifications.
∗ Refer to page 1363 for lead wire lengths.

Weight

[g]

Auto switch model		D-M9N(V)	D-M9P(V)	D-M9B(V)
Lead wire length	0.5 m (**Nil**)	8		7
	1 m (**M**)	14		13
	3 m (**L**)	41		38
	5 m (**Z**)	68		63

Dimensions

[mm]

D-M9□

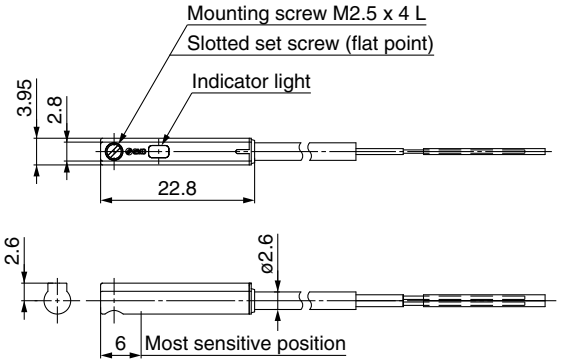

D-M9□V

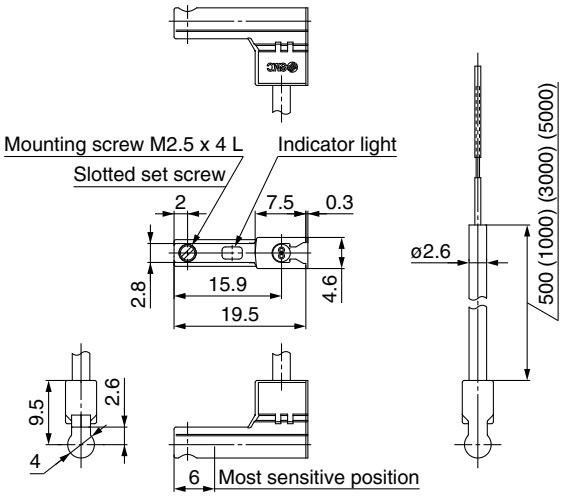

Normally Closed Solid State Auto Switch Direct Mounting Type
D-M9NE(V)/D-M9PE(V)/D-M9BE(V)

Refer to the SMC website for details on products that are compliant with international standards.

Grommet

- **Output signal turns on when no magnetic force is detected.**
- **Can be used for the actuator adopted by the solid state auto switch D-M9 series (excluding special order products)**

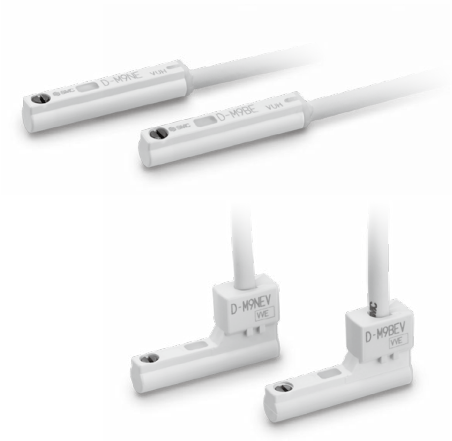

⚠Caution

Precautions

Fix the auto switch with the existing screw installed on the auto switch body. The auto switch may be damaged if a screw other than the one supplied is used.

Auto Switch Specifications

PLC: Programmable Logic Controller

D-M9□E, D-M9□EV (With indicator light)						
Auto switch model	D-M9NE	D-M9NEV	D-M9PE	D-M9PEV	D-M9BE	D-M9BEV
Electrical entry direction	In-line	Perpendicular	In-line	Perpendicular	In-line	Perpendicular
Wiring type	3-wire				2-wire	
Output type	NPN		PNP		—	
Applicable load	IC circuit, Relay, PLC				24 VDC relay, PLC	
Power supply voltage	5, 12, 24 VDC (4.5 to 28 V)				—	
Current consumption	10 mA or less				—	
Load voltage	28 VDC or less		—		24 VDC (10 to 28 VDC)	
Load current	40 mA or less				2.5 to 40 mA	
Internal voltage drop	0.8 V or less at 10 mA (2 V or less at 40 mA)				4 V or less	
Leakage current	100 μA or less at 24 VDC				0.8 mA or less	
Indicator light	Red LED illuminates when turned ON.					
Standard	CE/UKCA marking					

Oilproof Flexible Heavy-duty Lead Wire Specifications

Auto switch model		D-M9NE(V)	D-M9PE(V)	D-M9BE(V)
Sheath	Outside diameter [mm]	ø2.6		
Insulator	Number of cores	3 cores (Brown/Blue/Black)		2 cores (Brown/Blue)
	Outside diameter [mm]	ø0.88		
Conductor	Effective area [mm²]	0.15		
	Strand diameter [mm]	ø0.05		
Min. bending radius [mm] (Reference values)		17		

∗ Refer to page 1363 for solid state auto switch common specifications.
∗ Refer to page 1363 for lead wire lengths.

Weight

[g]

Auto switch model		D-M9NE(V)	D-M9PE(V)	D-M9BE(V)
Lead wire length	0.5 m (**Nil**)	8		7
	1 m (**M**)∗1	14		13
	3 m (**L**)	41		38
	5 m (**Z**)∗1	68		63

∗1 The 1 m and 5 m options are produced upon receipt of order.

Dimensions

[mm]

D-M9□E

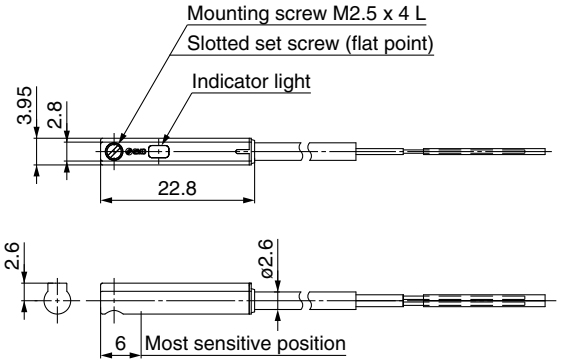

D-M9□EV

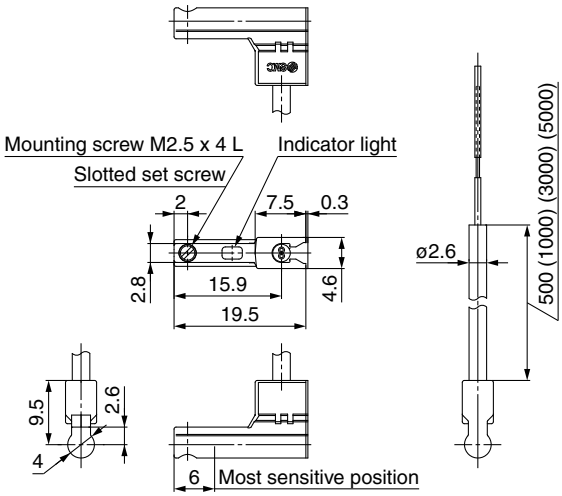

2-Color Indicator Solid State Auto Switch Direct Mounting Type
D-M9NW(V)/D-M9PW(V)/D-M9BW(V)

Refer to the SMC website for details on products that are compliant with international standards.

Grommet

- **2-wire load current is reduced (2.5 to 40 mA).**
- **Using flexible cable as standard spec.**
- **The proper operating range can be determined by the color of the light. (Red → Green ← Red)**

⚠Caution

Precautions

Fix the auto switch with the existing screw installed on the auto switch body. The auto switch may be damaged if a screw other than the one supplied is used.

Auto Switch Specifications

PLC: Programmable Logic Controller

D-M9□W, D-M9□WV (With indicator light)						
Auto switch model	D-M9NW	D-M9NWV	D-M9PW	D-M9PWV	D-M9BW	D-M9BWV
Electrical entry direction	In-line	Perpendicular	In-line	Perpendicular	In-line	Perpendicular
Wiring type	3-wire				2-wire	
Output type	NPN		PNP		—	
Applicable load	IC circuit, Relay, PLC				24 VDC relay, PLC	
Power supply voltage	5, 12, 24 VDC (4.5 to 28 V)				—	
Current consumption	10 mA or less				—	
Load voltage	28 VDC or less		—		24 VDC (10 to 28 VDC)	
Load current	40 mA or less				2.5 to 40 mA	
Internal voltage drop	0.8 V or less at 10 mA (2 V or less at 40 mA)				4 V or less	
Leakage current	100 μA or less at 24 VDC				0.8 mA or less	
Indicator light	Operating range ····· Red LED illuminates. Proper operating range ····· Green LED illuminates.					
Standard	CE/UKCA marking					

Oilproof Flexible Heavy-duty Lead Wire Specifications

Auto switch model		D-M9NW(V)	D-M9PW(V)	D-M9BW(V)
Sheath	Outside diameter [mm]	ø2.6		
Insulator	Number of cores	3 cores (Brown/Blue/Black)		2 cores (Brown/Blue)
	Outside diameter [mm]	ø0.88		
Conductor	Effective area [mm²]	0.15		
	Strand diameter [mm]	ø0.05		
Min. bending radius [mm] (Reference values)		17		

∗ Refer to page 1363 for solid state auto switch common specifications.
∗ Refer to page 1363 for lead wire lengths.

Weight

[g]

Auto switch model		D-M9NW(V)	D-M9PW(V)	D-M9BW(V)
Lead wire length	0.5 m (**Nil**)	8		7
	1 m (**M**)	14		13
	3 m (**L**)	41		38
	5 m (**Z**)	68		63

Dimensions

[mm]

D-M9□W

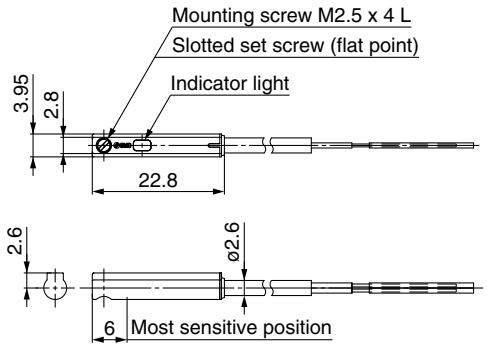

D-M9□WV

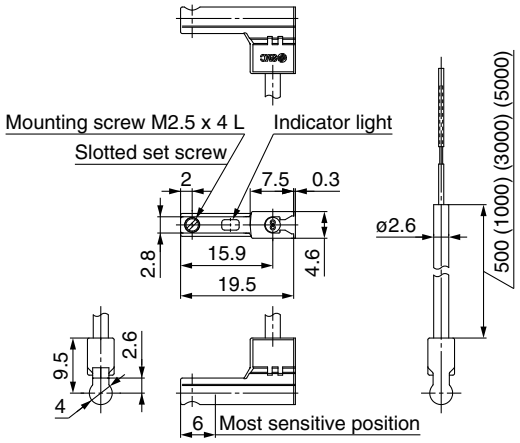

LESYH Series
Specific Product Precautions 1

Be sure to read this before handling the products. Refer to page 1351 for safety instructions, pages 1352 to 1357 for electric actuator precautions, and pages 1358 to 1367 for auto switch precautions.

Design

⚠Warning

1. Do not apply a load in excess of the specification limits.

Select a suitable actuator by work load and allowable moment. If the product is used outside of the specification limits, the eccentric load applied to the guide will be excessive and have adverse effects such as the generation of play on the guide, reduced accuracy, reduced service life of the product.

2. Do not use the product in applications where excessive external force or impact force is applied to it.

This can cause a malfunction.

Handling

⚠Caution

Battery-less Absolute (Step Motor 24 VDC)

1. INP output signal

1) Positioning operation
When the product comes within the set range of the step data [In position], the INP output signal will turn ON.
Initial value: Set to [0.50] or higher.

2) Pushing operation
When the effective force exceeds the step data [Trigger LV], the INP output signal will turn ON. Use the product within the specified range of the [Pushing force] and [Trigger LV].
To ensure that the actuator pushes the workpieces with the set [Pushing force], it is recommended that the [Trigger LV] be set to the same value as the [Pushing force].

2. The moving force should be 100%.

If the moving force is set below the values above, it may cause the generation of an alarm.

3. For pushing operations, set the product to a position at least 0.5 mm away from a workpiece. (This position is referred to as the pushing start position.)

The following alarms may be generated and operation may become unstable if the product is set to the same position as a workpiece.

a. "Posn failed"

The product cannot reach the pushing start position due to variations in the width of workpieces.

b. "Pushing ALM"

The product is pushed back from the pushing start position after starting to push.

Handling

⚠Caution

4. Absolute encoder ID mismatch error at the first connection

In the following cases, an "ID mismatch error" alarm occurs after the power is turned ON. Perform a return to origin operation after resetting the alarm before use.

- When an electric actuator is connected and the power is turned ON for the first time after purchase*1
- When the actuator or motor is replaced
- When the controller is replaced

*1 If you have purchased an electric actuator and controller with the set part number, the pairing may have already been completed and the alarm may not be generated.

"ID mismatch error"

Operation is enabled by matching the encoder ID on the electric actuator side with the ID registered in the controller. This alarm occurs when the encoder ID is different from the registered contents of the controller. By resetting this alarm, the encoder ID is registered (paired) to the controller again.

When a controller is changed after pairing is completed				
	Encoder ID no. (* Numbers below are examples.)			
Actuator	17623	17623	17623	17623
Controller	17623	17699	17699	17623
ID mismatch error occurred?	No	Yes	Error reset ⇒ No	

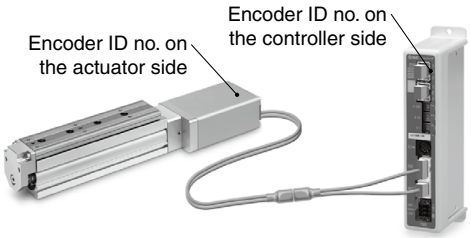

The ID number is automatically checked when the control power supply is turned ON.
An error is output if the ID number does not match.

5. In environments where strong magnetic fields are present, use may be limited.

A magnetic sensor is used in the encoder. Therefore, if the actuator motor is used in an environment where strong magnetic fields are present, malfunction or failure may occur.
Do not expose the actuator motor to magnetic fields with a magnetic flux density of 1 mT or more.
When installing an electric actuator and an air cylinder with an auto switch (ex. CDQ2 series) or multiple electric actuators side by side, maintain a space of 40 mm or more around the motor. Refer to the construction drawing of the actuator motor.

Specific Product Precautions 2

Be sure to read this before handling the products. Refer to page 1351 for safety instructions, pages 1352 to 1357 for electric actuator precautions, and pages 1358 to 1367 for auto switch precautions.

Handling

⚠ Caution

- **When lining up actuators**

SMC actuators can be used with their motors adjacent to each other. However, for actuators with a built-in auto switch magnet, maintain a space of 40 mm or more between the motors and the position where the magnet passes.

Refer to the construction drawings in the catalog for the magnet position.

○ Can be used with their motors adjacent to each other

✕ Do not allow the motors to be in close proximity to the position where the magnet passes.

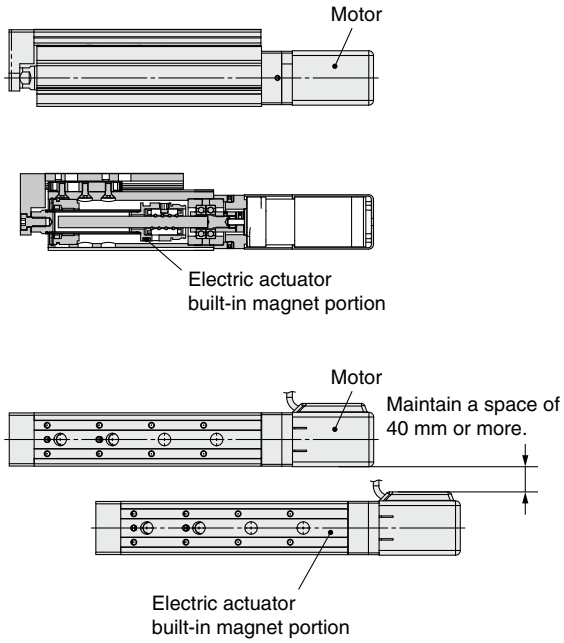

6. The connector size of the motor cable is different from that of the electric actuator with an incremental encoder.

The motor cable connector of an electric actuator with a battery-less absolute encoder is different from that of an electric actuator with an incremental encoder. As the connector cover dimensions are different, take the dimensions below into consideration during the design process.

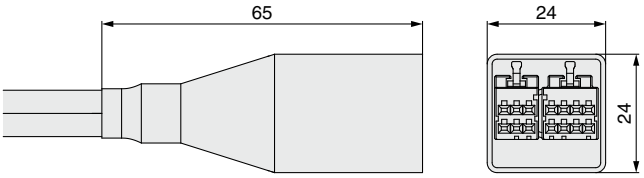

Battery-less absolute encoder connector cover dimensions

AC Servo Motor

7. For thrust control, make sure to set it to "torque control mode," and operate within the "pushing speed" range of each model.

Do not hit the workpiece or the stroke end with the piston in the "position control mode," "speed control mode," or "positioning mode." The lead screw, bearing, and internal stopper may be damaged, causing malfunction.

8. Normal/reverse torque limit value is set to 100% as a default.

It is the maximum torque (the limit value) in the "position control mode," "speed control mode," or "positioning mode." When the product is operated with a smaller value than the default, acceleration when driving can decrease. Set it upon confirmation with the actual equipment used.

9. When fluctuations in the load are caused during operation, malfunction, noise, or alarm generation may occur.

The gain tuning may not be suitable for fluctuating loads.

Adjust the gain properly by following the instructions in the driver manual.

Battery-less Absolute (Step Motor 24 VDC) AC Servo Motor

10. When the pushing operation is used, be sure to set to [Pushing operation]. Never allow the table to collide with the stroke end except during return to origin.

When incorrect instructions are inputted, such as those which cause the product to operate outside of the specification limits or outside of the actual stroke through changes in the controller/driver settings and/or origin position, the table may collide with the stroke end of the actuator. Be sure to check these points before use.

If the table collides with the stroke end of the actuator, the guide, belt, or internal stopper may break. This can result in abnormal operation.

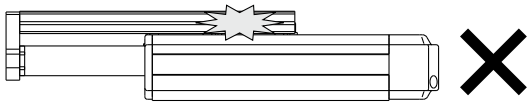

Handle the actuator with care when it is used in the vertical direction as the workpiece will fall freely from its own weight.

11. The actual speed of this actuator is affected by the load.

Check the model selection section of the catalog.

12. Do not apply a load, impact, or resistance in addition to the transferred load during return to origin.

Additional force will cause the displacement of the origin position.

13. The table and guide block are made of special stainless steel, but can rust in an environment where droplets of water adhere to it.

Specific Product Precautions 3

Be sure to read this before handling the products. Refer to page 1351 for safety instructions, pages 1352 to 1357 for electric actuator precautions, and pages 1358 to 1367 for auto switch precautions.

Handling

⚠ Caution

14. Do not dent, scratch, or cause other damage to the body, table and end plate mounting surfaces.

Doing so may cause unevenness in the mounting surface, play in the guide, or an increase in the sliding resistance.

15. Do not dent, scratch or cause other damage to the surface over which the rail and guide will move.

Doing so may cause play or an increase in the sliding resistance.

16. Do not apply strong impact or an excessive moment while mounting a workpiece.

If an external force over the allowable moment is applied, it may cause play in the guide or an increase in the sliding resistance.

17. Keep the flatness of mounting surface within 0.02 mm.

If a workpiece or base does not sit evenly on the body of the product, play in the guide or an increase in the sliding resistance may occur. Do not deform the mounting surface by mounting with workpieces tucked in.

18. Do not drive the main body with the table fixed.

19. When mounting the product, use screws of adequate length and tighten them to the maximum torque or less.

Tightening the screws with a higher torque than recommended may result in a malfunction, while tightening with a lower torque can result in the displacement of the mounting position or, in extreme conditions, the actuator could become detached from its mounting position.

Body fixed/ Side mounting (Body tapped)

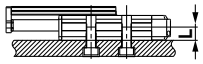

Size	Screw size	Max. tightening torque [N·m]	**L** (Max. screw-in depth [mm])
8	M4 x 0.7	1.5	5
16	M5 x 0.8	3	6.5
25	M6 x 1	5.2	8.5

Workpiece fixed/Front mounting

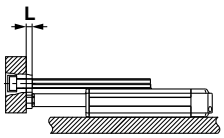

Size	Screw size	Max. tightening torque [N·m]	**L** [mm]
8	M4 x 0.7	1.5	8
16	M5 x 0.8	3	10
25	M6 x 1	5.2	12

To prevent the workpiece retaining screws from penetrating the end plate, use screws that are 0.5 mm or shorter than the maximum screw-in depth. If long screws are used, they may touch the end plate and cause a malfunction.

Workpiece fixed/Top mounting

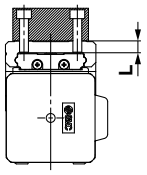

Size	Screw size	Max. tightening torque [N·m]	**L** [mm]
8	M3 x 0.5	0.63	4.8 (Max.)
16	M5 x 0.8	3	6.5 (Max.)
25	M6 x 1	5.2	8 (Max.)

To prevent the workpiece retaining screws from touching the guide block, use screws that are the maximum screw-in depth or less. If long screws are used, they may touch the guide block and cause a malfunction.

20. When external force is to be applied to the table, it is necessary to reduce the work load for the sizing.

When a cable duct or flexible moving tube is attached to the actuator, the sliding resistance of the table will increase, which may lead to the malfunction of the product.

21. Do not grasp or peel off a masking tape on the bottom of the body.

The masking tape may peel off and foreign matter may get inside the actuator.

22. When the table operates, the gap can be done between actuator (marked with the arrow below). Be careful not to put hands or fingers in a gap.

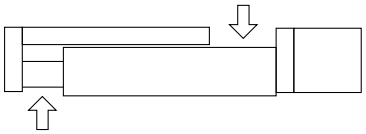

23. Install the body as shown below with the ○.

Since the product support becomes unstable, it may cause a malfunction, noise or an increase in the deflection.

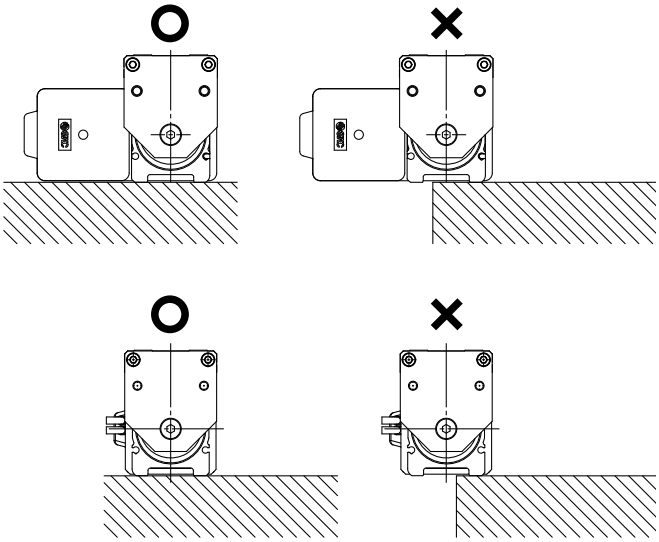

24. Even with the same product number, the table of some products can be moved by hand and the table of some products cannot be moved by hand. However, there is no abnormality with these products. (Without lock)

This difference is caused because there is a little variation with the positive efficiency (when the table is moved by the motor) and there is a large variation with the reverse efficiency (when the table is moved manually) due to the product characteristics. There is hardly any difference among products when they are operated by the motor.

Specific Product Precautions 4

Be sure to read this before handling the products. Refer to page 1351 for safety instructions, pages 1352 to 1357 for electric actuator precautions, and pages 1358 to 1367 for auto switch precautions.

Maintenance

⚠ Warning

1. **Ensure that the power supply is stopped before starting maintenance work or replacement of the product.**
2. **For lubrication, wear protective glasses.**
3. **Perform maintenance according to the following requirements.**

Maintenance frequency

Perform maintenance according to the table below.

Frequency	Appearance check	Belt check
Inspection before daily operation	○	—
Inspection every 6 months*1	—	○
Inspection every 250 km*1	—	○
Inspection every 5 million cycles*1	—	○

*1 Select whichever comes first.

- **Items for visual appearance check**

1. Loose set screws, Abnormal amount of dirt, etc.
2. Check for visible damage, Check of cable joint
3. Vibration, Noise

- **Items for belt check (R/L type only)**

Stop operation immediately and replace the belt when any of the following occur.

a. Tooth shape canvas is worn out
Canvas fiber becomes fuzzy, Rubber is coming off and the fiber has become whitish, Lines of fibers have become unclear

b. Peeling off or wearing of the side of the belt
Belt corner has become rounded and frayed threads stick out

c. Belt partially cut
Belt is partially cut, Foreign matter caught in the teeth of other parts is causing damage

d. A vertical line on belt teeth is visible
Damage which is made when the belt runs on the flange

e. Rubber back of the belt is softened and sticky

f . Cracks on the back of the belt are visible