Rotary Grippers Made to Order

Finger option: MRHQ-X50, -X51
Air gripper with dust cover: MRHQ-X111, -X112, -X113

Finger option Improved amount of mounting freedom

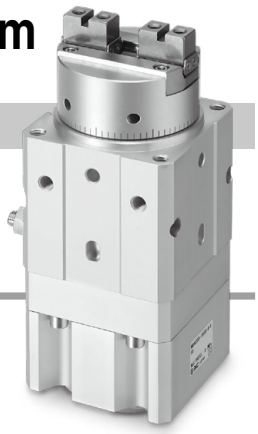

1 Flat type fingers

Symbol **-X50**

The distance to the workpiece can be shortened.
The finger option of the air gripper MHZ series is mounted.

How to Order

MRHQ □□ - □ SX - □ - □ - X50

- Bore size
- Action
- Rotation angle
- Switch type 1
- Switch type 2
- Finger option/ Flat type fingers

For details, refer to the **WEB catalog** or the Best Pneumatics No. 4.

Dimensions (Dimensions other than shown below are the same as standard type. For details, refer to the **WEB catalog** or the Best Pneumatics No. 4.)

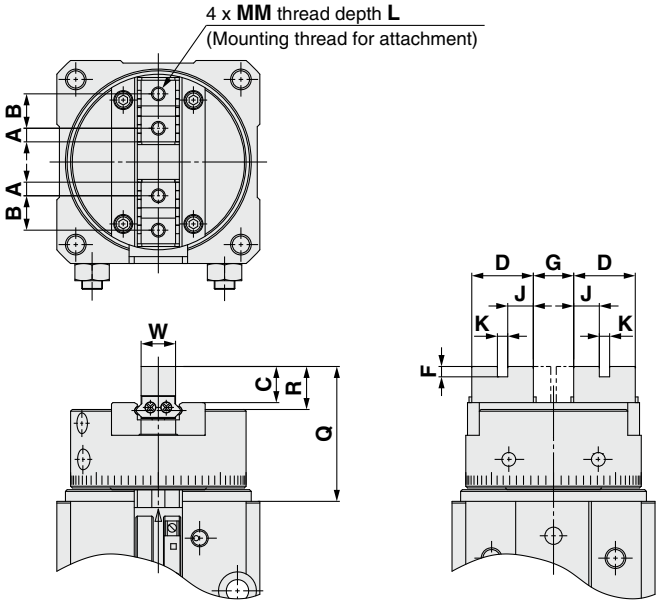

[mm]

Model	A	B	C	D	F	G When open	G When closed	J	K	MM	L	R	Q	W
MRHQ10	2.45	6	5.2	10.9	2	$5.4^{+2.2}_{0}$	$1.4^{0}_{-0.2}$	4.45	$2H9^{+0.025}_{0}$	M2.5 x 0.45	5	5.7	25.7	$5^{0}_{-0.05}$
MRHQ16	3.05	8	8.3	14.1	2.5	$7.4^{+2.2}_{0}$	$1.4^{0}_{-0.2}$	5.8	$2.5H9^{+0.025}_{0}$	M3 x 0.5	6	9.5	32.7	$8^{0}_{-0.05}$
MRHQ20	3.95	10	10.5	17.9	3	$11.6^{+2.3}_{0}$	$1.6^{0}_{-0.2}$	7.45	$3H9^{+0.025}_{0}$	M4 x 0.7	8	12.5	39.2	$10^{0}_{-0.05}$
MRHQ25	4.9	12	13.1	21.8	4	$16^{+2.5}_{0}$	$2^{0}_{-0.2}$	8.9	$4H9^{+0.025}_{0}$	M5 x 0.8	10	15.1	48	$12^{0}_{-0.05}$

Finger option Improved amount of mounting freedom

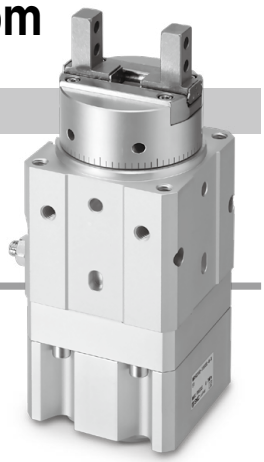

2 Through-holes in opening/closing direction

Symbol **-X51**

Mounting attachments inside the fingers allows a simple configuration.
The finger option of the air gripper MHZ series is mounted.

How to Order

MRHQ □□ - □ SX - □ - □ - X51

- Bore size
- Action
- Rotation angle
- Switch type 1
- Switch type 2
- Finger option/ Through-holes in opening/closing direction

For details, refer to the **WEB catalog** or the Best Pneumatics No. 4.

Dimensions

(Dimensions other than shown below are the same as standard type. For details, refer to the **WEB catalog** or the Best Pneumatics No. 4.)

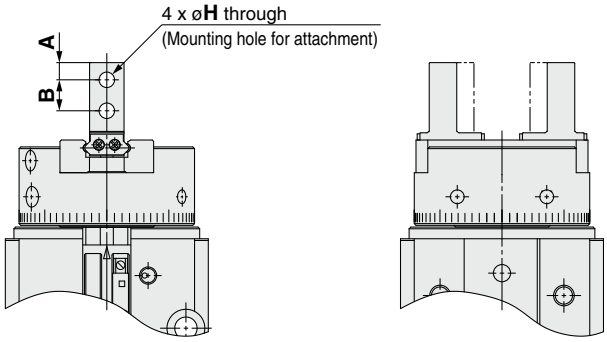

[mm]

Model	A	B	H
MRHQ10	3	5.7	2.9
MRHQ16	4	7	3.4
MRHQ20	5	9	4.5
MRHQ25	6	12	5.5

With dust cover Three types of materials are available.

Air gripper with dust cover

Symbol **-X111 to X113**

Dust cover offers excellent dust proof. Three types of dust cover materials are available.
The dust cover is equivalent to the air gripper MHZJ2 series.

How to Order

MRHQ □□ - □ SX - □ - □ - X111

- Bore size
- Action
- Rotation angle
- Switch type 1
- Switch type 2
- Dust cover type

X111	Chloroprene rubber (CR)
X112	Fluororubber (FKM)
X113	Silicone rubber (Si)

For details, refer to the **WEB catalog** or the Best Pneumatics No. 4.

Dimensions (Dimensions other than shown below are the same as standard type. For details, refer to the **WEB catalog** or the Best Pneumatics No. 4.)

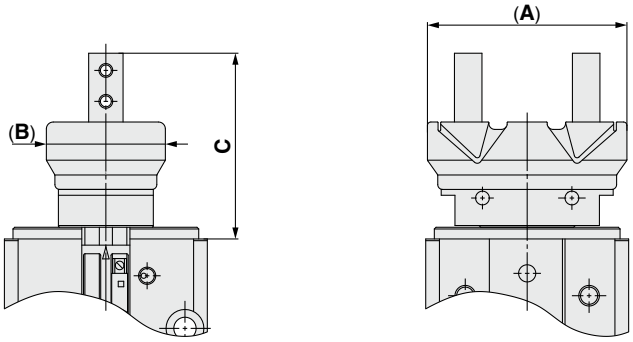

[mm]

Model	A	B	C
MRHQ10	34	21	36.5
MRHQ16	45	29.6	44.3
MRHQ20	58	34.6	54
MRHQ25	73	42	66.9

⚠ **Safety Instructions**	Be sure to read “Handling Precautions for SMC Products” (M-E03-3) before using.